INSTRUCTIONS-PARTS LIST

308871

Rev. E

This manual contains important warnings and information.
READ AND KEEP FOR REFERENCE.

INSTRUCTIONS

8 HORSEPOWER, GASOLINE-POWERED

GMax 10000 Airless Paint Sprayer

3000 psi (207 bar, 21 MPa) Maximum Working Pressure

Model 232640
Sprayer only

Model 233009
Sprayer with gauge kit

⚠ CAUTION

Always use a minimum hose length of 100 foot (30.4 m) 1/4 inch ID or 50 foot (15.2 m) 3/8 inch ID. An undersized hose may result in poor equipment performance and damage to the clutch or pressure control.

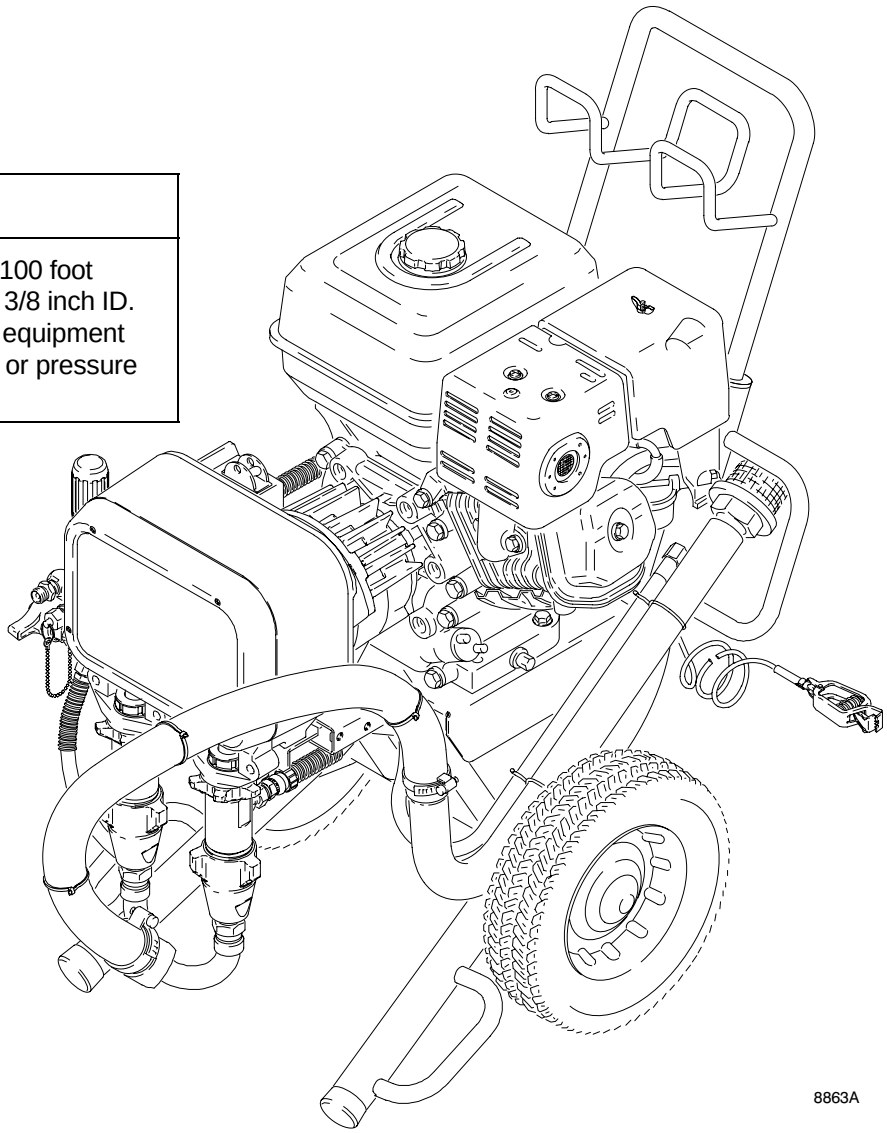

GRACO INC. P.O. BOX 1441 MINNEAPOLIS, MN 55440–1441
©COPYRIGHT 1999, GRACO INC.
Graco Inc. is registered to I.S. EN ISO 9001

Table of Contents

Warnings 2
Component Identification and Function 5
Setup 6
Fueling 8
Startup 9
Maintenance 11
Flushing 12
Troubleshooting 14
Bearing Housing & Connecting Rod 16
Drive Housing 18
Pinion, Clutch, Clamp, Field, & Engine 20
Pinion Housing 21
Clutch 23
Engine 25
Field & Wiring Harness 26
Clamp 26
Clutch Housing 26
Reassembly 27
Pressure Control Replacement 30
Displacement Pump Repair 32
Sprayer Parts Drawings and Sprayer Parts Lists . . . 34
Pinion Assembly Parts list and Drawing 38
Pressure Control Parts list 39
Dimensions 39
Graco Phone Number 39
Technical Data 40
Graco Warranty 40

Symbols

Warning Symbol

⚠ WARNING

This symbol alerts you to the possibility of serious injury or death if you do not follow the instructions.

Caution Symbol

⚠ CAUTION

This symbol alerts you to the possibility of damage to equipment if you do not follow the instructions.

⚠ WARNING

INSTRUCTIONS

EQUIPMENT MISUSE HAZARD

Equipment misuse can cause the equipment to rupture or malfunction and result in serious injury.

- This equipment is for professional use only.
- Read all instruction manuals, tags, and labels before operating the equipment.
- Use the equipment only for its intended purpose. If you are not sure, call your distributor.
- Do not alter or modify this equipment. Use only genuine Graco parts.
- Check equipment daily. Repair or replace worn or damaged parts immediately.
- Do not exceed the maximum working pressure of the lowest rated system component. Refer to the **Technical Data** on page 40 for the maximum working pressure of this equipment.
- Use fluids and solvents which are compatible with the equipment wetted parts. Refer to the **Technical Data** section of all equipment manuals. Read the fluid and solvent manufacturer's warnings.
- Do not use hoses to pull equipment.
- Route hoses away from traffic areas, sharp edges, moving parts, and hot surfaces. Do not expose Graco hoses to temperatures above 82°C (180°F) or below –40°C (–40°F).
- Do not lift pressurized equipment.
- Comply with all applicable local, state, and national fire, electrical, and safety regulations.
- Wear hearing protection when operating this equipment.
- Do not use 1,1,1–trichloroethane, methylene chloride, other halogenated hydrocarbon solvents or fluids containing such solvents in pressurized aluminum equipment. Such use could result in a chemical reaction, with the possibility of explosion.

⚠ WARNING

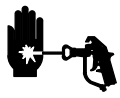

INJECTION HAZARD

Spray from the gun, leaks or ruptured components can inject fluid into your body and cause extremely serious injury, including the need for amputation. Fluid splashed in the eyes or on the skin can also cause serious injury.

- Fluid injected into the skin may look like just a cut, but it is a serious injury. **Get immediate medical attention.**
- Do not point the gun at anyone or at any part of the body.
- Do not put your hand or fingers over the spray tip.
- Do not stop or deflect leaks with your hand, body, glove or rag.
- Do not “blow back” fluid; this is not an air spray system.
- Always have the tip guard and the trigger guard on the gun when spraying.
- Check the gun diffuser operation weekly. Refer to the gun manual.
- Be sure the gun trigger safety operates before spraying.
- Lock the gun trigger safety when you stop spraying.
- Follow the **Pressure Relief Procedure** on page 12 if the spray tip clogs and before cleaning, checking or servicing the equipment.
- Tighten all fluid connections before operating the equipment.
- Check the hoses, tubes, and couplings daily. Replace worn or damaged parts immediately. Do not repair high pressure couplings; you must replace the entire hose.
- Fluid hoses must have spring guards on both ends, to help protect them from rupture caused by kinks or bends near the couplings.

TOXIC FLUID HAZARD

Hazardous fluid or toxic fumes can cause serious injury or death if splashed in the eyes or on the skin, inhaled, or swallowed.

- Know the specific hazards of the fluid you are using.
- Store hazardous fluid in an approved container. Dispose of hazardous fluid according to all local, state and national guidelines.
- Always wear protective eyewear, gloves, clothing and respirator as recommended by the fluid and solvent manufacturer.

FUEL HAZARD

The fuel used in this unit is combustible and when spilled on a hot surface can ignite and cause a fire.

- Do not fill the fuel tank while the engine is running or hot.

EXHAUST HAZARD

The exhaust contains poisonous carbon monoxide which is colorless and odorless.

- Do not operate this equipment in a closed building.

⚠ WARNING

FIRE AND EXPLOSION HAZARD

Improper grounding, poor ventilation, open flames or sparks can cause a hazardous condition and result in a fire or explosion and serious injury.

- If there is any static sparking or you feel an electric shock while using this equipment, **stop spraying immediately.** Do not use the equipment until you identify and correct the problem.
- Provide fresh air ventilation to avoid the buildup of flammable fumes from solvents or the fluid being sprayed.
- Keep the spray area free of debris, including solvent, rags, and gasoline.
- Disconnect all electrical equipment in the spray area.
- Extinguish all open flames or pilot lights in the spray area.
- Do not smoke in the spray area.
- Do not turn on or off any light switch in the spray area while operating or if fumes are present.
- Do not operate a gasoline engine in the spray area.
- Ground the sprayer to a true earth ground with the ground wire and clamp (supplied).
- Use only electrically conductive hoses.

MOVING PARTS HAZARD

Moving parts can pinch or amputate your fingers.

- Keep clear of all moving parts when starting or operating the sprayer.
- Before servicing the equipment, follow the **Pressure Relief Procedure** on page 12 to prevent the equipment from starting unexpectedly.

NOTE: This is an example of the DANGER label on your sprayer. This label is available in other languages, free charge. See page 38 to order.

⚠ DANGER ⚠

FIRE AND EXPLOSION HAZARD	SKIN INJECTION HAZARD
Spray painting, flushing or cleaning equipment with flammable liquids in confined areas can result in fire or explosion. Use outdoors or in extremely well ventilated areas. Ground equipment, hoses, containers and objects being sprayed. Avoid all ignition sources such as static electricity from plastic drop cloths, open flames such as pilot lights, hot objects such as cigarettes, arcs from connecting or disconnecting power cords or turning light switches on and off. Failure to follow this warning can result in death or serious injury.	Liquids can be injected into the body by high pressure airless spray or leaks – especially hose leaks. Keep body clear of the nozzle. Never stop leaks with any part of the body. Drain all pressure before removing parts.Avoid accidental triggering of gun by always setting safety latch when not spraying. Never spray without a tip guard. In case of accidental skin injection, seek immediate "Surgical Treatment". Failure to follow this warning can result in amputation or serious injury.

READ AND UNDERSTAND ALL LABELS AND INSTRUCTION MANUALS BEFORE USE

Component Identification and Function

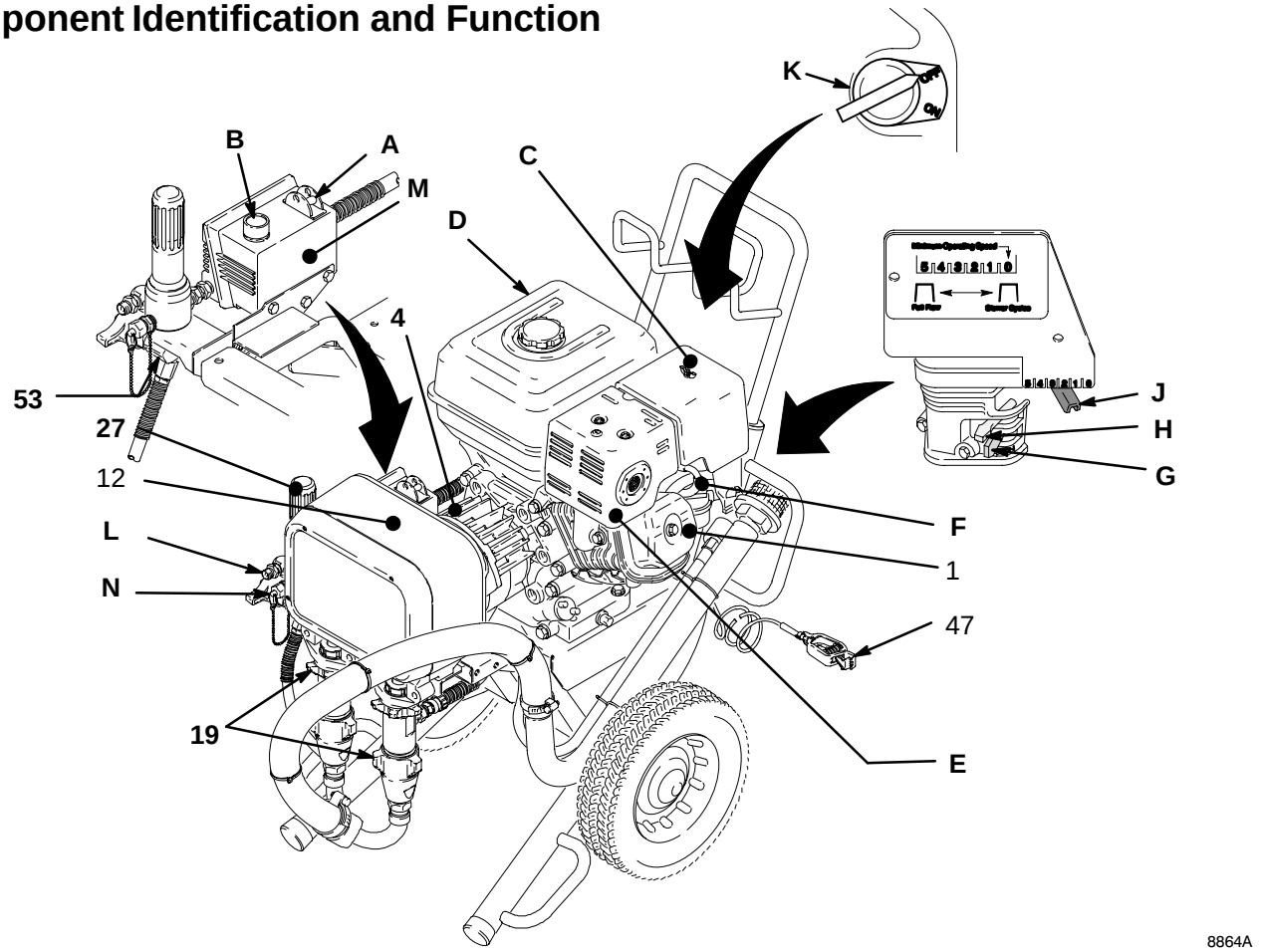

Fig. 1

A	Pressure Control Switch	ON/OFF, enables/disables clutch function
B	Pressure Adjusting Knob	Controls fluid outlet pressure
C	Air Cleaner*	Filters air entering the carburetor
D	Fuel Tank*	Holds 1.59 gallons (6.04 liters) of [(R+M)/2]; 86 octane gasoline
E	Muffler*	Reduces noise of internal combustion
F	Spark Plug Cable*	Routes electrical current to spark plug
G	Fuel Valve*	On/off valve to regulate fuel flow from gasoline tank to carburetor
H	Choke*	Enriches air/gasoline mixture for cold starting
J	Throttle*	Adjusts engine speed for large or small orifice spray tips
K	Engine Switch*	Enables/disables engine operation
L	Secondary Fluid Outlet	Second hose and spray gun is connected here
M	Pressure Control	Controls clutch cycling to maintain fluid pressure.
N	Primary Fluid Outlet	Hose and spray gun is connected here
1	Engine*	8 HP gasoline engine
4	Clutch	Transfers power from engine to drive assembly
12	Drive Assembly	Transfers power from clutch to displacement pumps
19	Displacement Pump (2)	Provides fluid to be sprayed through spray gun
27	Fluid Filter	Filters fluid between source and spray gun
47	Grounding Clamp and Wire	Grounds sprayer system
53	Pressure Drain Valve	Relieves fluid pressure when open
*****	For more detailed explanations of these controls, refer to the Honda engine manual; supplied	

Setup

⚠ CAUTION

To avoid damaging the pressure control, which may result in poor equipment performance and component damage, follow these precautions.

1. Always use nylon spray hose. Never use a wire braid hose; it is too rigid to act as a pulsation dampener.
2. Always use a minimum hose length of 100 foot (30.4 m) x 1/4 inch ID or 50 foot (15.2 m) x 3/8 inch ID hose at each outlet.
3. Never install any shutoff device between the filter (27) and the main hose. See Fig. 2.
4. Always use the main filter outlet (29) for a one gun operation. Never plug this outlet.

1. **Connect hose and gun.** (Refer to Fig. 2.)

   a. Remove the plastic cap from the 3/8 npsm (m) filter outlet nipple (29). Screw the first 50 foot (15.2 m) main fluid hose onto the nipple. Connect the second 50 foot hose to the first 50 foot with a coupling nipple. Read the CAUTION, above.

   b. Connect the whip end hose between the main fluid hoses and the inlet adapter of the gun.

   c. Do not use thread sealant, and do not install the spray tip yet!

⚠ WARNING

If you supply your own hoses and spray gun, be sure the hoses are electrically conductive, that the gun has a tip guard, and that each part is rated for at least *3000 psi (207 bar, 21 MPa) Maximum Working Pressure*. This is to reduce the risk of serious injury caused by static sparking, fluid injection or over-pressurization and rupture of the hose or gun.

2. **Two gun hookup.** Remove the cap (34) from the secondary hose outlet. Connect the second outlet hoses to the sprayer as explained in Step 1, above.

3. **Fill packing nut/wetcup.** Fill the packing nut/wetcup (416) 1/3 full with Graco Throat Seal Liquid (TSL), supplied. See Fig. 2.

4. **Check the engine oil level.** Refer to the Honda engine manual, supplied. This is a summary of the information: Remove one of the oil fill plugs (M); the oil should be almost overflowing. See Fig. 3. Add oil as necessary.

   Recommended lubrication oil: Use a high-quality, detergent oil, SAE 10W–30, classified “FOR SERVICE SG or SF”, for regular use and for breaking–in a new engine.

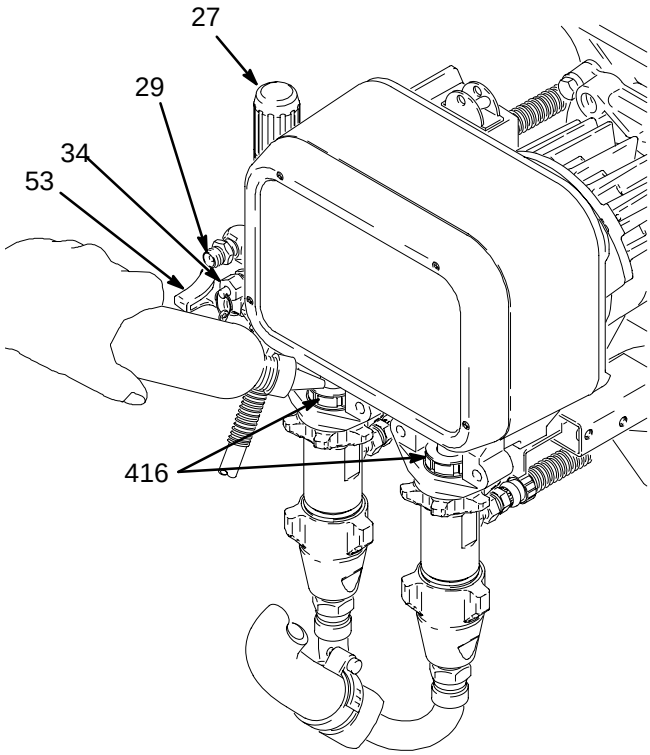

27 Fluid Filter
53 Pressure drain valve (below fluid filter)
34 Secondary outlet cap
29 3/8 npsm(m) primary fluid outlet
416 Wetcup

8865A

Fig. 2

Setup

5. **Be sure your system is properly grounded before operating it.** Connect the sprayer to a true earth ground with the grounding wire and clamp (47) ; for example, a cold water pipe or a ground rod driven into the earth.

6. **Fill the gas tank.** See **Fueling**, page 8.

7. **Flush the pumps** to remove the lightweight oil which was left in the pumps to protect them from corrosion.

   a. Before using water–base paint, flush with mineral spirits, followed by soapy water, and then flush with clean water.

   b. Before using oil–base paint, flush with mineral spirits, only.

   c. See **Flushing** on page 13 for the flushing procedure.

8. **Prepare the paint** according to the manufacturer's recommendations.

   a. Remove any skin that may have formed.

   b. Stir the paint to mix the pigments.

   c. Strain the paint through a fine nylon mesh bag (available at most paint dealers) to remove the particles that could clog the filter or spray tip. This is probably the most important step toward trouble–free spraying.

9. **Keep the sprayer upright and level** during operation and whenever it is being moved. See the CAUTION on page 10.

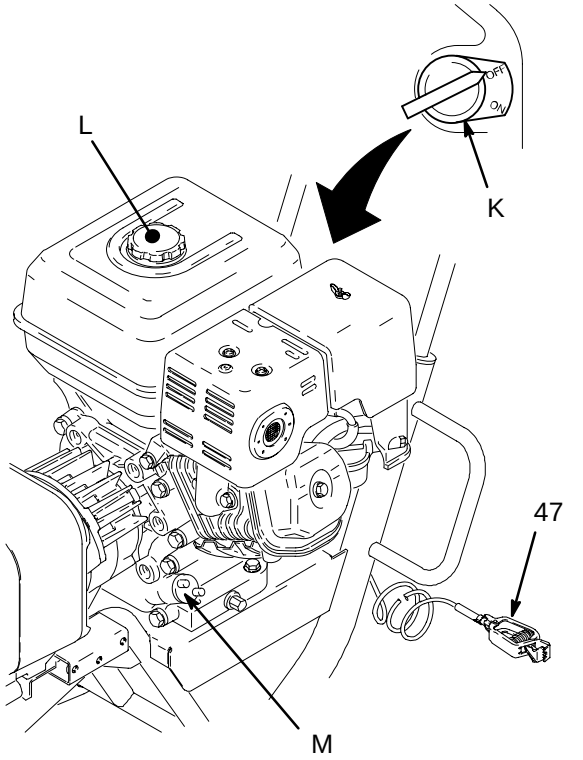

Fig. 3

Fueling

⚠ WARNING

FIRE AND EXPLOSION HAZARD
Gasoline is extremely flammable and explosive under certain conditions.

Always turn the engine switch (K**)** to off before refueling. (Fig. 3)

Refuel in a well-ventilated area.

Do not smoke or allow flames or sparks in the area where the engine is refueled or where the gasoline is stored.

Do not overfill the tank. Make sure the gas fill cap (L) is securely closed after refueling. (Fig. 3)

Be careful not to spill fuel when fueling. Fuel vapor or spilled fuel can ignite. If any fuel is spilled, make sure the area is dry before starting the engine.

1. **Fuel specifications.** Use automotive gasoline with a pump octane number [(R + M)/2] of 86 or higher, or a research octane number of 91 or higher. Unleaded fuel minimizes the combustion chamber deposits.

2. **Gasolines containing alcohol (gasohol).** Do not use gasohol which contains methanol, if the gasohol does not contain cosolvents and corrosion inhibitors for methanol. Even if it does contain such additives, do not use the gasohol if it contains more than 5% methanol or 10 % ethanol.

NOTE: The HONDA engine warranty does not cover the damage resulting from the use of gasolines containing a higher percentage of alcohol than mentioned in step 2. See the HONDA engine manual for more information.

3. **General.** Do not use any oil and gasoline mixtures or contaminated gasoline. Avoid getting any dirt, dust or water in the fuel tank.

4. **Tank Capacity.** 1.59 gallons (6.04 liters). Always leave at least 1/2 in. (13 mm) at the top of the tank for expansion.

5. **Shut off the engine before refueling.**

6. **After refueling, tighten the fuel tank cap firmly.**

Startup

Before You Start the Sprayer

1. **See Flushing** on page 12 to determine if you should flush the sprayer.

2. **Be sure the gas tank is full.**

3. **Check the engine oil level.**

NOTE: The engine stops automatically, or will not start, if it is low on oil. Refer to the oil fill procedure in the Honda engine manual or to step 4, page 6.

4. **Be sure the spark plug cable is firmly pushed onto the plug.**

Starting the Sprayer

NOTE: Refer to Fig. 1 as you start the sprayer.

1. **When starting a sprayer that IS NOT PRIMED,** remove the spray tip.

2. **If a secondary hose and gun is not installed,** be sure the cap is securely plugging the secondary outlet fitting.

3. **Place the suction tube into the paint, water or solvent container,** depending on whether you are flushing or are ready to spray.

4. **Open the black fuel shutoff lever** by pushing it in the direction of the arrow.

⚠ CAUTION

Never try to start the engine unless fluid pressure is relieved and the pressure control switch is OFF. Trying to start the engine when it is pressurized could damage the recoil system.

5. **Move the pressure control switch to OFF.**

6. **To start the engine:**

   a. Turn the pressure adjusting knob all the way counterclockwise to the lowest pressure setting.

   b. Slide the metal throttle lever away from the fuel tank to maximum position (fully left).

   c. If the engine is cold, close the choke by moving the gray lever.

   d. f the engine is warm, close the choke by moving the gray lever only half way or not at all.

   e. Turn the engine switch to ON.

⚠ WARNING

MOVING PARTS HAZARD
A rope which recoils too quickly may hit someone and cause serious injury. The rope could also jam in recoil assembly.

   f. Hold the frame of the sprayer with one hand and pull the starter rope rapidly and firmly. Continue holding the rope as you let it return. Pull and return the rope until the engine starts.

   g. Open the choke as soon as the engine starts, except in cold weather. In cold weather, leave the choke closed for 10 to 30 seconds before opening it to keep the engine running.

7. **Unlock the gun trigger safety.**

Startup

8. **Prime the pumps:**

   a. Place the suction tube in the bucket of paint, water, or solvent.

   b. Open the pressure drain valve.

   c. Set engine speed to idle.

   d. Move the pressure control switch to ON. Turn the pressure adjusting knob to about 1/4 turn from minimum pressure.

   e. Run the pumps until fluid is flowing smoothly from the pressure drain valve, indicating both pumps are primed. A pulsing flow which nearly stops indicates that one pump is not primed – wait for a smooth flow from the pressure drain valve.

   f. Move the pressure control switch to OFF.

   g. If the pumps were primed with water or solvent, remove the suction tube from the water or solvent and place it in the paint. Repeat steps b through f.

   h. Close the pressure drain valve.

9. **When both pumps are primed:**

   a. Remove the spray tip.

   b. Set the engine speed to full flow.

   c. Move the pressure control switch to ON. Turn the pressure adjusting knob 1/4 turn for minimum pressure.

   d. Unlock the gun trigger safety.

   e. Trigger the gun into the pail until fluid flows from the gun. If pumping solvent or solvent–based paint, hold a metal part of the gun firmly against a grounded metal pail.

   f. Release the gun trigger and lock the gun trigger safety.

   g. Move the pressure control switch to OFF.

   h. Relieve pressure by opening the pressure drain valve.

   i. Close the pressure drain valve.

⚠ WARNING

INJECTION HAZARD
To reduce the risk of serious injury from fluid injection, never operate the spray gun with the tip guard removed.

10. **Install the spray tip in the gun.** See the separate tip instruction manual, 308644, supplied.

11. Move the pressure control switch to ON.

12. **Adjust the engine speed and pump pressure.** Unlock the gun trigger safety. Trigger the gun onto a test paper to check the spray pattern and atomization. Turn the pressure adjusting knob until you get a good pattern. Then slowly lower the throttle setting as far as you can without changing the spray pattern.

13. If using two or more guns, the throttle must be set with all guns open at once. If this is not practical, determine the optimum throttle setting by trial and error while using the sprayer. If the sprayer cycles while all guns are in use, lower the throttle setting until the sprayer just barely cycles. If the pressure drops when all guns are in use and the sprayer does not cycle, increase the throttle setting until the pressure returns (sprayer will probably cycle).

NOTE: Do not lower the throttle setting below the Minimum Operating Speed.

⚠ CAUTION

Always use the lowest needed fluid pressure and the lowest needed throttle setting, to increase the life of the sprayer. Higher settings cause excessive clutch cycling, premature tip wear and premature pump wear.

⚠ CAUTION

Close the black fuel shutoff lever whenever you are transporting the sprayer to prevent fuel from flooding the engine.

Keep the sprayer upright and level when operating it and when transporting it. This prevents crankcase oil from leaking into the combustion chamber, which makes startup very difficult.

⚠ CAUTION

Operating the sprayer with one pump not primed can lead to premature packing wear and/or damage to the unprimed pump.

Startup

Loss of Prime to One Pump

Introduction of air into the pumps, either by changing fluids or due to a suction leak, may result in the loss of prime of one or both pumps. If both pumps lose their prime, no fluid is pumped. Loss of prime to only one pump is not as obvious, particularly if the sprayer is operating at less than half capacity.

The following are indications of the sprayer operating on one pump:

1. Continuous operation (no clutch cycling) at low pressure, with less than the maximum tip sizes (page 40). (Check that the pressure knob is turned all the way UP, the engine is operating at maximum speed, and the filter screen is clean.
2. Severe flow pulsations at the gun(s).
3. Clutch cycling is slower after changing fluids.
4. One pump will feel warmer than the other.

One pump cannot be primed while the other pump is pumping under pressure.

To prime one or both pumps, relieve the pressure on the system by opening the drain valve and following the instruction on **Prime the pumps**, page 10.

Maintenance

⚠ WARNING

INJECTION HAZARD
To reduce the risk of serious injury, whenever you are instructed to relieve pressure, follow the **Pressure Relief Procedure** on page 12.

⚠ CAUTION

For detailed engine maintenance and specifications, refer to the separate engine manual, supplied.

DAILY: Check the engine oil level and fill as necessary.

DAILY: Check and fill the gas tank.

AFTER THE FIRST 20 HOURS OF OPERATION
Drain the oil and refill with clean oil.

WEEKLY: Remove the cover of the air filter and clean the element. Replace the element, if necessary. If operating in an unusually dusty environment, check the filter daily and replace it, if necessary.

Replacement elements may be purchased from your local HONDA dealer.

WEEKLY: Check the level of the TSL in the displacement pump packing nut. Fill the nut, if necessary. Keep TSL in the nut to help prevent fluid buildup on the piston rod and premature wear of the packings.

AFTER EACH 100 HOURS OF OPERATION:
Change the oil. Refer to the engine manual for additional maintenance instructions.

SPARK PLUG: Use only an (NGK) BPR6ES or a (NIPPON DENSO) W20EPR-U plug. Gap the plug to 0.028 to 0.031 inch (0.7 to 0.8 mm). Use a spark plug wrench when installing and removing the plug.

Pressure Relief Procedure

⚠ WARNING

INJECTION HAZARD
The system pressure must be manually relieved to prevent the system from starting or spraying accidentally. Fluid under high pressure can be injected through the skin and cause serious injury. To reduce the risk of an injury from injection, splashing fluid, or moving parts, follow the **Pressure Relief Procedure** whenever you:

- are instructed to relieve the pressure,
- stop spraying,
- check or service any of the system equipment,
- install or clean the spray tip.

1. Engage the gun safety latch.
2. Turn the engine switch to OFF.
3. Move the pressure control ON/OFF switch to OFF.
4. Disengage the gun safety latch. Hold a metal part of the gun firmly to a grounded metal pail. Trigger the gun to relieve pressure.
5. Engage the gun safety latch.
6. Open the pressure drain valve. Leave the pressure drain valve open until you are ready to spray again.
7. Disconnect the spark plug cable.

If you suspect that the spray tip or hose is completely clogged, or that pressure has not been fully relieved after following the steps above, VERY SLOWLY loosen the tip guard retaining nut or hose end coupling to Relieve the pressure gradually, then loosen completely. Now clear the tip or hose.

Flushing

When to Flush

1. New Sprayer. This sprayer was factory tested in lightweight oil,which was left in to protect the pump parts.

   Before using water–base paint, flush with mineral spirits, followed by a soapy water flush, and then a clean water flush.

   Before using oil–base paint, flush with mineral spirits.

2. Changing Colors. Flush with a compatible solvent such as mineral spirits or water.

3. Changing from water–base to oil–base paint. Flush with warm, soapy water, then mineral spirits.

4. Changing from oil–base to water–base paint. Flush with mineral spirits, followed by warm, soapy water, and then a clean water flush.

⚠ CAUTION

To prevent pump corrosion or damage to pump components, never leave water or any type of paint in the sprayer when it is not in use. Pump the water or the paint out with mineral spirits.

5. Storage.

   Water base paint: flush with water, then mineral spirits and leave the pumps, hose and gun filled with mineral spirits. Shut off the sprayer, remove the spark plug cable, and open the pressure drain valve to Relieve the pressure. Leave the drain valve open.

   Oil base paint: flush with mineral spirits and leave the pump, hose and gun filled with mineral spirits. Shut off the sprayer, remove the spark plug cable, and open the pressure drain valve to Relieve the pressure. Leave the drain valve open.

6. Startup after storage.

   Before using water–base paint, flush out the mineral spirits with soapy water, and then with clean water.

   When using oil–based paint, flush out the mineral spirits with the paint to be sprayed.

Flushing

How to Flush

⚠ CAUTION

When changing fluids, do not drain all of the first fluid from the suction tube before inserting the suction tube into the another fluid. Not doing so may introduce excessive air into the pumps and cause one or both pumps to lose their prime.

After moving the suction tube to a new fluid, pump the first fluid and any trapped air, out through the drain valve before beginning to pump the new fluid to the guns.

NOTE: The word solvent refers to water or oil-based solvent.

1. Follow the **Pressure Relief Procedure**, page 12.
2. Remove the filter bowl (A) and screen (B); see instruction manual 307273, supplied. Install the bowl and support (C), without the screen, to flush. Clean the screen separately. See Fig. 4.
3. Close the pressure drain valve (53). See Fig. 4.
4. Put the suction tube in a grounded pail of solvent.
5. Remove the spray tip from the gun(s).

⚠ WARNING

FIRE AND EXPLOSION HAZARD
To reduce static sparking and splashing, always remove the spray tip from the gun, and hold a metal part of the gun firmly to the side of a grounded metal pail when flushing.

6. Follow **Startup** on page 9. Keep the gun triggered until clean solvent comes from the nozzle. Release the trigger and lock the gun trigger safety.

⚠ CAUTION

Operation with one pump not primed can lead to premature packing wear and damage to the pump.

NOTE: For multiple guns, unlock the gun trigger safety on each gun and trigger that gun until clean solvent comes from the nozzle. Flush each gun at least one more time.

7. Check all fluid connections for leaks. Relieve the pressure before tightening any connections. Start the sprayer. Recheck the connections for leaks.
8. Remove the suction tube from the solvent pail. Unlock the gun trigger safety. Trigger the gun to force solvent from the hose. Do not let the pumps run dry for more than 30 seconds, to avoid damaging the pump packings. Relieve the pressure.
9. Remove the strainer, suction tube and suction hose and clean them separately to be sure all paint sediment is removed. Dried paint can build up in these parts and later cause performance problems.
10. Unscrew the filter bowl and reinstall the clean screen. Reinstall the bowl, hand tight only.
11. Follow Storage or Changing Colors, on page 12 Relieve the pressure.

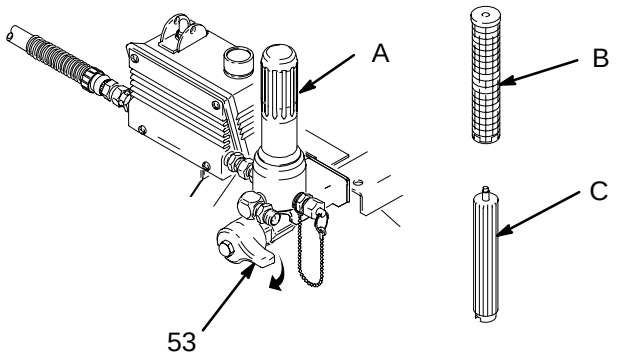

Fig. 4

Troubleshooting

⚠ WARNING

INJECTION HAZARD
To reduce the risk of serious injury, whenever you are instructed to relieve pressure, follow the **Pressure Relief Procedure** on page 12.

Check everything in the chart before disassembling the sprayer.

PROBLEM	CAUSE	SOLUTION
The engine or sprayer won't start.	The engine switch is not on.	Turn on the switch.
	The engine is out of gas.	Refill the gas tank. See page 8.
	The engine oil level is low.	Try to start the engine. Replenish the oil, if necessary. See Step 4, page 6.
	The spark plug cable is disconnected or it is damaged	Reconnect the spark plug cable or replace the spark plug.
	There is frozen water in the pressure control.	Allow the sprayer to thaw completely before starting it.
The engine won't "pull over".	Oil is seeping into the combustion chamber.	Remove the spark plug. Pull the starter rope 3 or 4 times. Clean or replace the plug. Try to start the engine. Keep the sprayer upright to avoid oil seepage.
The engine operates, but the displacement pump does not operate.	The pressure control switch is turned off.	Turn on the switch.
	The pressure setting is too low.	Turn the pressure adjusting knob clockwise to increase pressure.
	The fluid filter (27) is dirty.	Clean the filter. See page 13.
	The tip or the tip filter is clogged.	Clean the tip or the tip filter. See the gun instruction manual.
	The displacement–pump rod is stuck due to dried paint.	Repair the pump. See page 32.
	The connecting rod is worn or damaged.	Replace the connecting rod. See page 16.
	The drive housing is worn or damaged.	Replace the drive housing. See page 18.
	The electrical power is not energizing the field.	Check the wiring connections. See page 25. With the pressure control switch turned on and the pressure turned to maximum, use a test light to check the power at the black and white wires from the pressure control. Have the pressure control checked by an authorized Graco dealer.
	The clutch is worn, damaged, or incorrectly positioned.	Replace the clutch. See page 23.
	The pinion assembly is worn or damaged.	Repair or replace the pinion assembly. See page 20.

PROBLEM	CAUSE	SOLUTION
The pump output is low on the upstroke.	The inlet screen (102) is clogged.	Clean the screen.
	A piston ball (425) is not seating.	Service the piston ball–check. See page 32.
	The piston packings are worn or damaged.	Replace the packings. See page 32.
	A o-ring (417) in the displacement pump is worn or damaged.	Replace the o-ring. See page 32.
The output of one pump is low on the downstroke or on both of the strokes.	The inlet screen (102) is clogged.	Clean the screen.
	The piston packings are worn or damaged.	Replace the packings. See page 32.
	An intake valve ball is not seating properly.	Clean the intake valve. See page 32.
	The engine speed is too low.	Increase the throttle setting. See Step 12, page 10.
	The clutch is worn or damaged.	Replace the clutch. See page 23.
The paint leaks into the wet-cup.	The wetcup is loose.	Tighten the wetcup just enough to stop leak-age.
	The throat packings is worn or damaged.	Replace the packings. See page 32.
	A displacement rod is worn or damaged.	Replace the rod. See page 32.
The fluid delivery is low.	The inlet screen (102) is clogged.	Clean the screen.
	The pressure setting is too low.	Increase the pressure. See Step 12, page 10.
	The engine speed is too low.	Increase the throttle setting. See Step 12, page 10.
	One pump is not primed.	See Loss of prime, page 11.
	The fluid filter (27), the tip filter or the tip is clogged or dirty.	Clean the filter. See page 13. Or, see the gun instruction manual.
	There is a large pressure drop in the hose.	Use a larger diameter hose.
Excessive pulsation	One pump is not primed.	See Loss of prime, page 11.
Fluid is spitting from the gun.	There is air in the pump or the hose.	Check and tighten all the fluid connections. Reprime the pump. See page 10.
	The tip is partially clogged.	Clear the tip. See the gun instruction manual.
	The fluid supply is low or empty.	Refill the fluid supply. Prime the pump. See page 9. Check the fluid supply often to pre-vent running the pump dry.
The pumps are difficult to prime.	There is air in the pump or the hose.	Check and tighten all the fluid connections. Reduce the engine speed and cycle the pumps as slowly as possible during priming.
	The intake valve is leaking.	Clean the intake valve. Be sure ball seat is not nicked or worn and that the ball seats well. Reassemble the valve.
	The pump packings are worn.	Replace the pump packings. See page 32.
	The paint is too thick.	Thin the paint according to the supplier's recommendations.
	The engine speed is too high.	Decrease the throttle setting before priming the pump. See Step 8, page 10.

Bearing Housing & Connecting Rod

⚠ WARNING

INJECTION HAZARD
To reduce the risk of serious injury, whenever you are instructed to relieve pressure, follow the **Pressure Relief Procedure** on page 12.

NOTE: Steps 1 to 13 refer to Fig. 5 and Fig. 4.

1. Follow the **Pressure Relief Procedure**, page 12.
2. Remove the screws (55) and the front cover (13).
3. Unscrew the inlet manifold (98) from the pumps, holding a wrench on the pump intake valve (B) to keep the pump from loosening.
4. Disconnect hose (33) from outlet nipple (29).
5. Use a screwdriver to push up the retaining spring (17) at the top of the pump. Push the pin (16) out the rear.
6. Loosen jam nut (18). Unscrew and remove displacement pump.
7. Use a hex key wrench to remove the four screws (57) and lockwashers (58) from the bearing housing (15).
8. While pulling the connecting rod (14) with one hand, lightly tap the lower rear of the bearing housing (15) with a plastic mallet to loosen it from the drive housing (12). Pull the bearing housing and the connecting rod assembly (14) off the drive housing.
9. Inspect the crank (A) for excessive wear and replace parts as needed.
10. Evenly lubricate the inside of the bronze bearing (C) in the bearing housing (15), and the inside of the connecting rod link (D), with high–quality motor oil (***do not*** *use grease*). Liberally pack the roller bearing (E) in the connecting rod assembly (14) with bearing grease.
11. Assemble the connecting rod (14) and bearing housing (15).
12. Clean the mating surfaces of the bearing and drive housings.
13. Align the connecting rod with the crank (A) and carefully align the locating pins (F) in the drive housing (12) with the holes in the bearing housing (15). Push the bearing housing onto the drive housing or tap it into place with a plastic mallet.

⚠ CAUTION

Do not use the bearing housing screws (57) to align or seat the bearing housing with the drive housing. These parts must be aligned using the locating pins (F), to avoid premature bearing wear.

14. Install the screws (57) and lockwashers (58) on the bearing housing. Tighten evenly to 300 in-lbs (34 N·m).
15. Refer to Installing the Pump on page 33.
16. Install the front cover.

⚠ WARNING

MOVING PARTS HAZARD
Be sure the retaining spring (17) is firmly in the groove, all the way around, to prevent the pin (16) from working loose due to vibration.

If the pin works loose, it or other parts could break off due the force of the pump action. These parts could be projected through the air and result in serious injury or property damage, including damage to the pump and bearing housing.

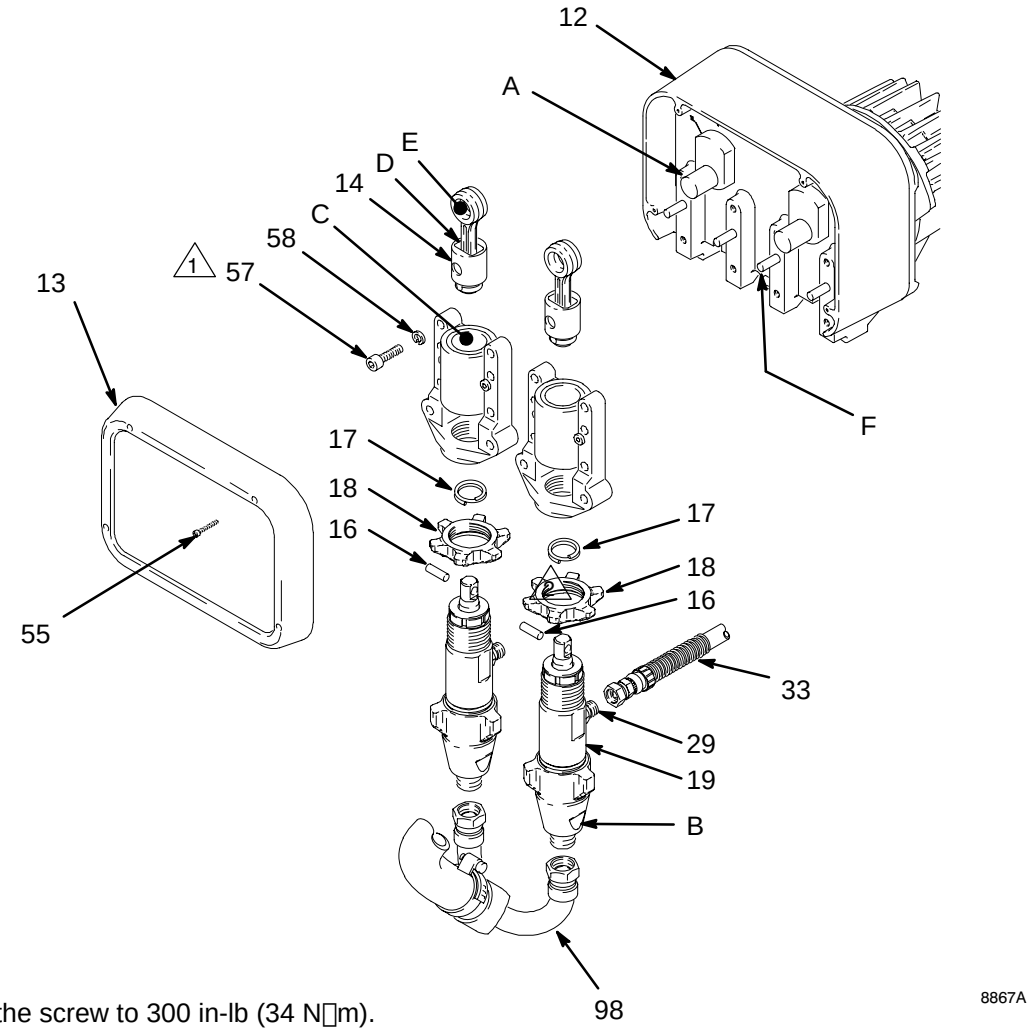

1 Torque the screw to 300 in-lb (34 N□m).

Fig. 5

Drive Housing

⚠ WARNING

INJECTION HAZARD
To reduce the risk of serious injury, whenever you are instructed to relieve pressure, follow the **Pressure Relief Procedure** on page 12.

NOTE: Refer to Fig. 6 for this procedure.

1. Follow the **Pressure Relief Procedure**, page 12.

2. Remove the pumps and bearing housings. Follow Steps 1 to 8 on page 16.

3. Remove two screws (26) holding the drive housing (12) to the cart frame (35).

4. Remove the three screws (20) and lockwashers (9) from the drive housing (12).

5. Remove the five screws (10) and lockwashers (9) from the pinion housing (11).

⚠ CAUTION

The sprayer may become out of balance with the drive housing removed. Support the rear of the cart to prevent the partially disassembled sprayer from falling over.

6. Lightly tap around the drive housing (12) to loosen the drive housing. Pull the drive housing straight off the pinion housing. Be prepared to support the gear clusters (24, 89), which may also come out.

⚠ CAUTION

Do not drop the gear clusters (24, 89) when removing the drive housing (12). The gear cluster is easily damaged. The gear may remain in either the drive housing or pinion housing.

Do not lose thrust balls (12c or 11d) located at each end of the gear cluster, or allow them to fall between the gears. The ball, which is heavily covered with grease, usually stays in the housing recesses, but could be dislodged. If the balls are caught between the gears and not removed, they will seriously damage the drive housing. If the balls are not in place, the bearings wear prematurely.

⚠ CAUTION

Drive housing must be set up and aligned properly or there will be premature bearing wear and loss of sprayer performance.

7. Place one bronze-colored washer (12a) and then one silver-colored washer (12b) on each shaft protruding from each big gear of the drive housing (12).

8. If replacing the complete drive housing assembly (12), brush G-n lubricant (supplied) on all gear teeth. Then recoat the gear teeth with bearing grease (supplied). Pack the remaining bearing grease into the bottom part of the drive housing. Use all of the bearing grease. See Fig. 7.

9. Install new gasket (109) (supplied).

10. Hold the crankshafts (A) between the **TL** timing lines on the drive housing while assembling the drive housing (12) to the pinion housing (11) until the gears are engaged. See Fig. 8.

11. From Step 5, work backwards to reassemble or, move ahead to the next section in this manual if further service is needed.

Drive Housing

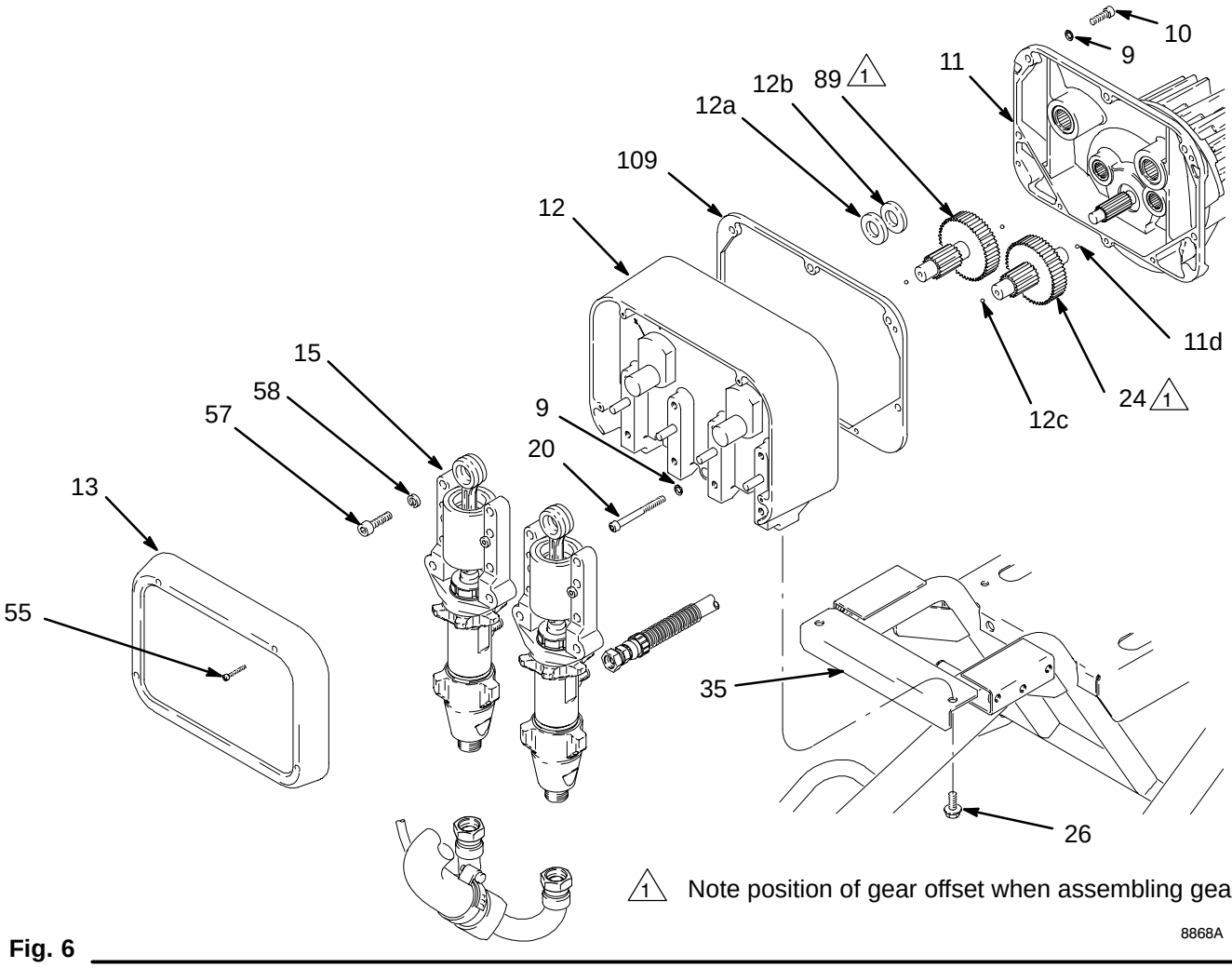

Fig. 6

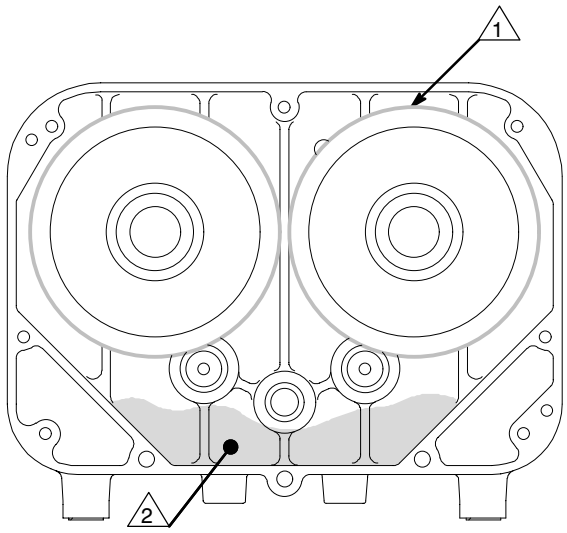

1 Coat with G-n lubricant

2 Pack with bearing grease

05089

Fig. 7

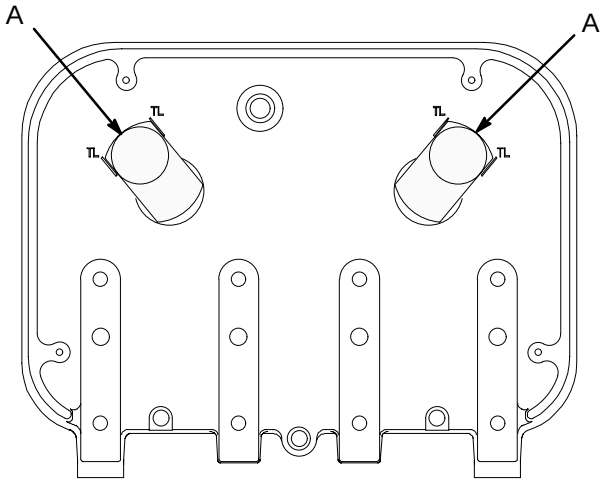

05088

Fig. 8

Pinion, Clutch, Clamp, Field, & Engine

Replacement of the pinion shaft (11f**), bearing (11g**), or splined hub (11h**) (Fig. 13, page 22) requires removal of the pinion housing (11). Follow steps 1 through 4 below.

If servicing clutch components only, see page 23.

Pinion Housing Removal

⚠ WARNING

INJECTION HAZARD
To reduce the risk of serious injury, whenever you are instructed to relieve pressure, follow the **Pressure Relief Procedure** on page 12.

NOTE: Refer to Fig. 9 for Steps 1 to 5.

1. Follow the **Pressure Relief Procedure**, page 12.
2. If the drive housing has not yet been removed, follow steps 1 through 6 of **DRIVE HOUSING**, on page 18.
3. Remove the two bottom screws (10) and lockwashers (9) first, then remove the two side screws (10) and lockwashers (9), and last remove the top screw (10) and lockwasher (9).
4. Pull the pinion housing (11) away from the clutch housing (2). The armature (4b) will come with it.
5. Pull the armature (4b) off the hub (11h***)* of the pinion housing. Also see Fig. 13.
6. If replacing the complete pinion housing assembly (11), brush G-n lubricant (supplied) on the pinion shaft teeth. Then recoat the pinion shaft teeth with bearing grease (supplied). Pack the remaining bearing grease in the bottom part of the pinion housing. Use all of the bearing grease.
7. Install new gasket (109) (supplied).
8. Reassemble to drive housing. See step 10 on page 18 for the timing procedure.

⚠ CAUTION

The sprayer will become out of balance with the drive housing and pinion housing removed. Support the rear of the cart to prevent the partially disassembled sprayer from falling over.

⚠ CAUTION

Do not lose the thrust balls (11d). Refer to the **CAUTION** on page 18 for more information.

NOTE: To disassemble the pinion, go to page 21. To disassemble more of the sprayer, go to page 23. To reassemble the sprayer from this point, skip ahead to **Reassembly**, page 29, Step 9.

1 See page 21.
2 Brush with G-n lubricant.
3 Pack with bearing grease.

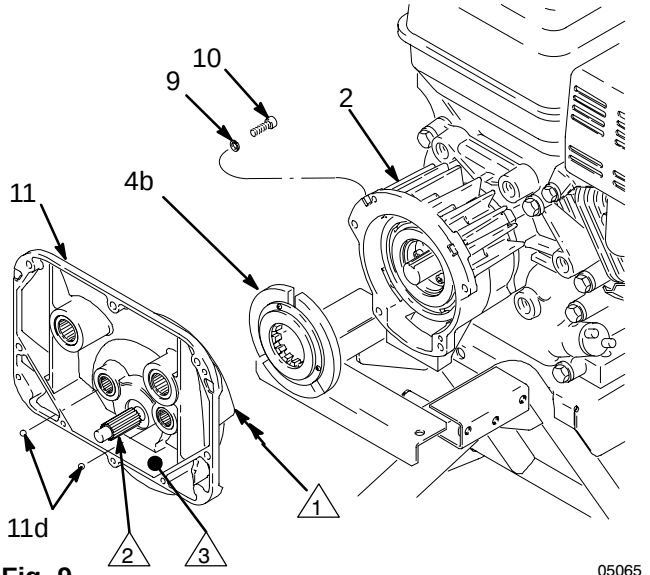

Fig. 9

Pinion Housing

Repairing the Pinion Shaft Assembly

NOTE: Refer to Fig. 13 except where noted.

NOTE: A hydraulic press is required for disassembly and reassembly of the pinion shaft assembly. A Repair Kit 237847 is available which includes the shaft and bearings, pre-assembled and lubricated.

<u>If using Repair Kit 237847, follow Steps 1 to 7, below.</u>

1. Remove the small ring (11j**) from the hub (11h**) and the large ring (11k) from the bearing recess of the pinion housing (11a).

2. ***Using a hydraulic press,*** push on the front of the shaft (11f**) to force the pinion shaft assembly out of the housing (11a). See Fig. 11.

3. Press the new pinion shaft assembly into the pinion housing, pushing it to the shoulder of the housing (11a). See Fig. 12. Use a steel tube to press on the outside diameter of the bearing to prevent damage to the bearing.

4. Install the rings (11k and 11j**). Be sure to install 11k with the bevel facing the back of the housing. See Fig. 13.

5. Install new gasket (109).

6. Reassemble to drive housing (12). See step 10 on page 18 for the timing procedure.

7. Go to **Reassembly**, page 29, Step 9, or continue on page 23.

A Hydraulic press
B Use a 5/8 in. round steel bar to push on the shaft (11f**)
C Position two steel bars as shown.
D Platform of hydraulic press

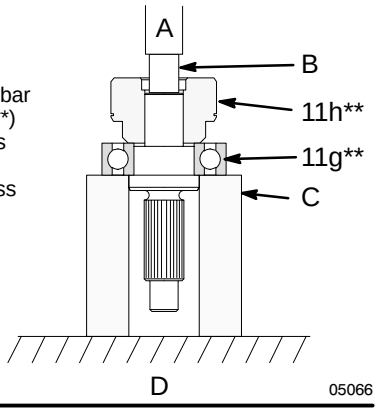

Fig. 10

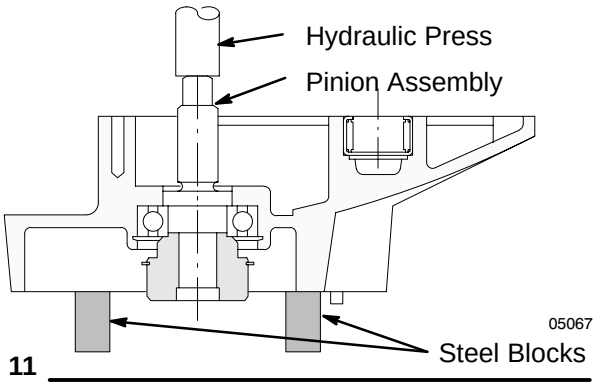

Fig. 11

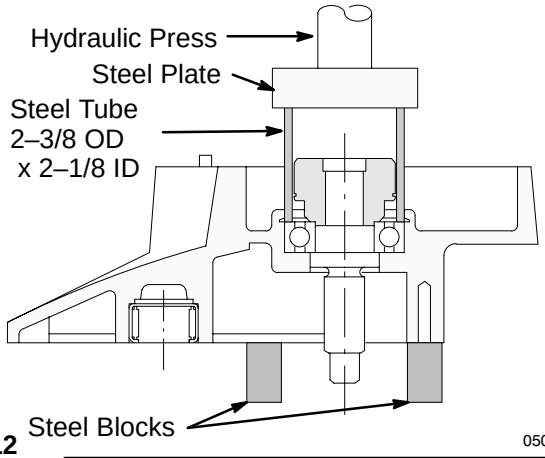

Fig. 12

<u>If purchasing parts separately, use these instructions. Disassemble as far as needed for the parts being replaced.</u>

NOTE: The old bearing (11g**) will be damaged when the pinion shaft assembly is removed. Have an extra bearing on hand if you need to remove it for any reason.

1. Remove the small ring (11j**) from the hub (11h**).

2. Remove the snap ring (11k) from the bearing recess of the pinion housing (11a).

3. ***Using a hydraulic press,*** support the housing on blocks. Push on the front of the shaft (11f**) to force the pinion shaft assembly out of the housing. See Fig. 11.

4. ***Using a hydraulic press,*** place pieces of steel bar stock on the inner race of the bearing (11g**) and press the shaft through the hub and bearing. See Fig. 10.

Pinion Housing

5. Apply lubricant to the parts as shown in Fig. 13.

6. ***Using a hydraulic press,*** press fit the following parts: Bearing (11g**) to the shaft shoulder , using a steel ring that contacts the inner race only. Hub (11h**) onto shaft (11f**) to contact the inner ring of bearing (11g**).

7. ***Using a hydraulic press,*** Install the pinion shaft assembly, by pressing it to the shoulder of the housing (11a). Use a steel tube to press on the bearing outer race to prevent damage to the bearing. See Fig. 12.

8. Install the rings (11k and 11j**). Be sure to install ring 11k with the bevel facing the back of pinion housing (11a). Install the small ring (11j**). See Fig. 13.

9. Perform steps 5 and 6 on page 21 of <u>If using Repair Kit 237847.</u>

10. Go to **Reassembly**, page 29, Step 9, or continue on page 23.

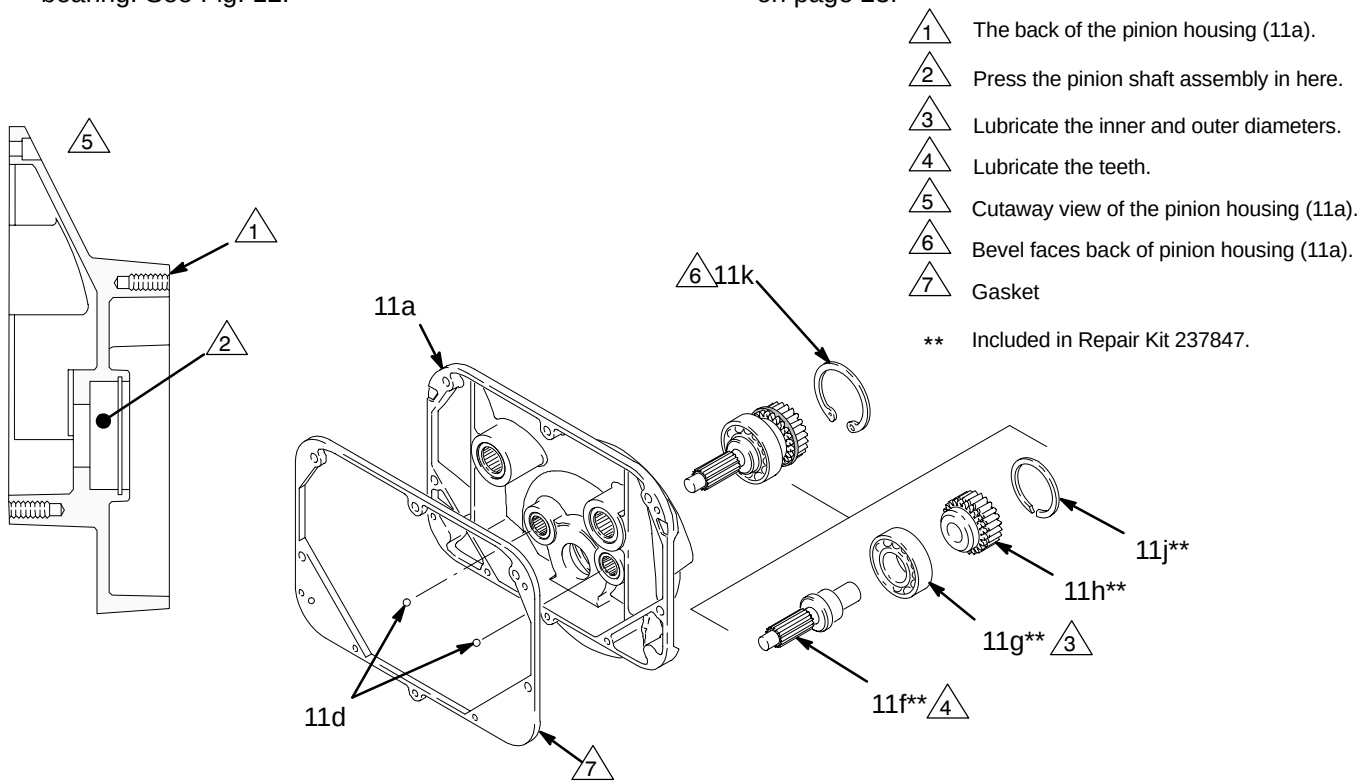

Fig. 13

Clutch

⚠ WARNING

INJECTION HAZARD
To reduce the risk of serious injury, whenever you are instructed to relieve pressure, follow the **Pressure Relief Procedure** on page 12.

NOTE: The clutch assembly (4) includes the armature (4b) and rotor (4a). The armature and rotor must be replaced together so they wear evenly.

NOTE: If the pinion assembly (11) is not yet separated from the clutch housing (2), follow Steps 1 to 4. Otherwise, start at Step 5.

NOTE: Refer to Fig. 14 for this procedure.

1. Follow the **Pressure Relief Procedure**, page 12.

2. Disconnect the hose (33) from the pump outlet nipple (29). Disconnect the drain hose (104) at the pressure drain valve (53). Also see Fig. 5 and Fig. 4.

3. Remove the two bottom screws (26) holding the drive housing to the cart frame (35).

4. Remove the two bottom screws (10) and lockwashers (9) first, then remove the two side screws (10) and lockwashers (9), and last remove the top screw (10) and lockwasher (9).

⚠ CAUTION

The sprayer may become out of balance with the drive housing and pinion housing removed. Support the rear of the cart to prevent the partially disassembled sprayer from falling over.

5. Tap lightly on the back of the bearing housing (15) with a plastic mallet to loosen the assembly (D) from the clutch housing. Pull the assembly away.

6. The armature (4b) was removed with the pinion housing. Remove the armature from the pinion hub.

⚠ CAUTION

Examine the splined hub (11h**, Fig. 13, page 22) for wear. Replace as needed. Follow the Pinion Housing instructions, page 21.

7. There are two ways to remove the rotor (4a).

   a. Remove the four socket head capscrews (22) and lockwashers (21). Install two of the screws in the threaded holes (E) in the rotor. Alternately tighten the screws until the rotor comes off. See Fig. 14.

   b. You can use a standard steering wheel puller (A). However, two 1/4–28 x 3 or 4 in. long screws (B) are also needed. Replace the short screws of the steering wheel puller with the longer screws (B). Turn the screws (B) into the threaded holes (E) of the rotor (4b). Tighten the capscrew (C) of the tool until the rotor comes off. See the Detail in Fig. 14.

8. Skip ahead to **Reassembly,** page 29, Step 7, or continue on page 25.

Clutch

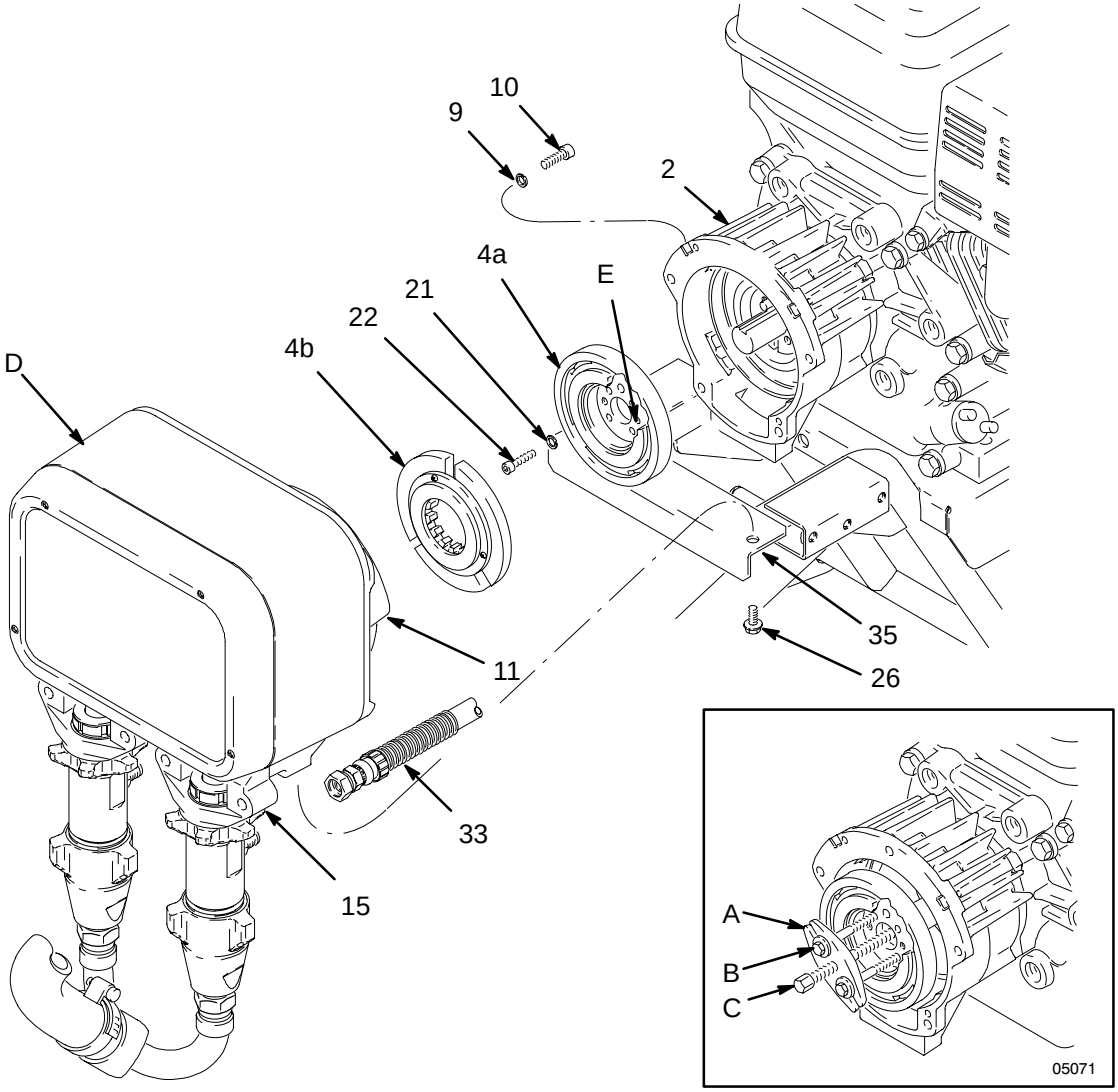

8869A

Fig. 14

Engine

NOTE: The engine must be removed before the Field, Clamp and Clutch Housing can be removed.

⚠ CAUTION

The sprayer will be out of balance when the engine, clutch housing, drive housing and pinion housing are removed. Support the rear of the cart to prevent the partially disassembled sprayer from falling over.

1. Working under the mounting plate (A), remove the two lock nuts (51) and then pull the screws (50) out of the base of the engine. Disconnect the red wire (B) from the engine lead (D). Disconnect the black and white wires from the field. Pull the wires (63) and (D) carefully through the grommets (66) before removing the engine. See Fig. 15 and 16.
2. Lift the engine carefully and place it on a work bench.
3. Remove the **Field and Wiring Harness, Clamp** and **Clutch Housing**, as instructed on pages 26 and 26.

NOTE: All service to the engine must be performed by an authorized HONDA dealer.

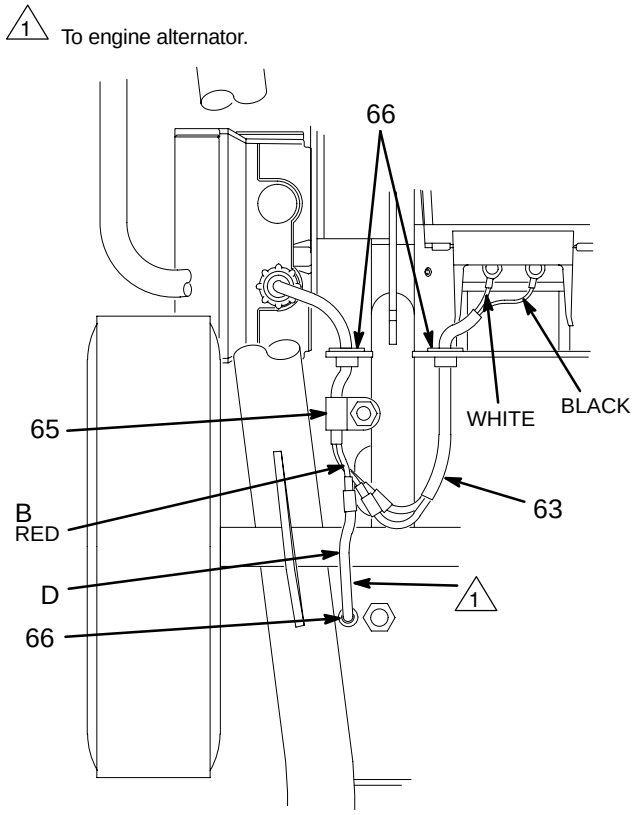

Fig. 15 Bottom View of Engine and Cart

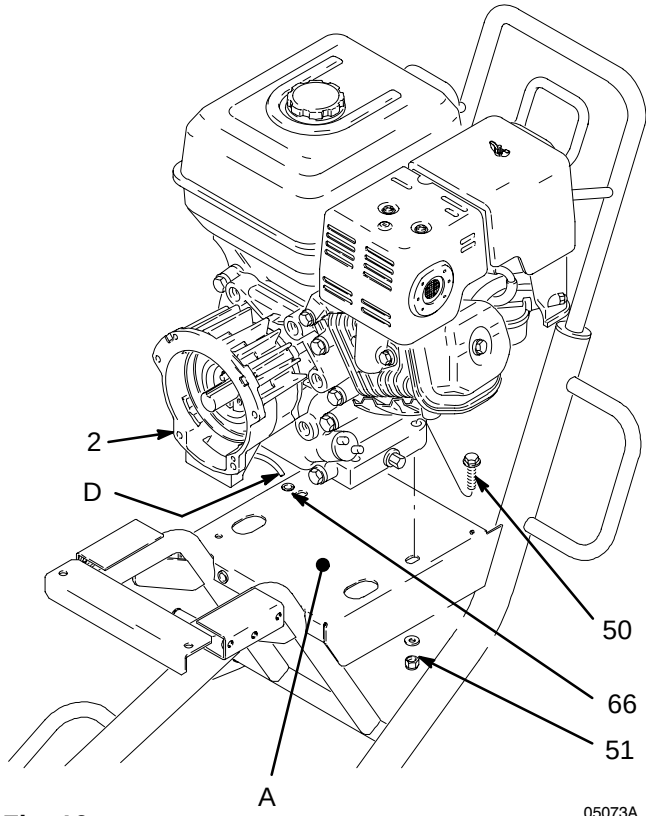

Fig. 16

Field & Wiring Harness

NOTE: Refer to Fig. 17.

1. Remove the engine from the cart. See page 25.
2. Pull the plastic caps (B) off the wire screws (62) in both places on the field. Remove the screws and remove the wire (63).
3. Back out the four setscrews (25) holding the field (6) to the clutch housing (2) approximately 5 turns.
4. Pull out the field. The field fits closely to the clutch housing and must be removed carefully to prevent jamming.
5. Skip ahead to **Reassembly,** page 27, Step 5 or continue on page 26.

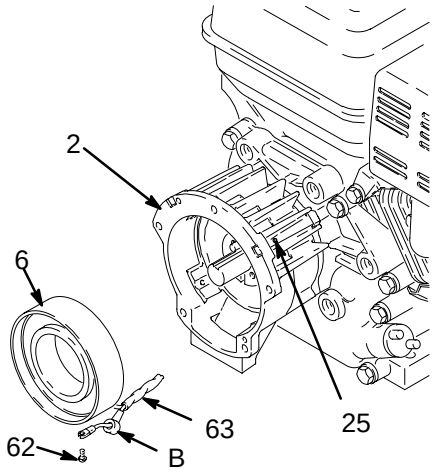

Fig. 17 05074

Clamp

NOTE: A standard steering wheel puller and two 1/4–28 x 3 or 4 in. long screws are required to remove the clamp.

NOTE: Refer to Fig. 18.

1. Loosen the two screws (22) on the clamp (3), working through the slot at the bottom of the clutch housing (2).
2. Install two screws (B) of the tool (A) in two of the threaded holes in the clamp (3). Tighten the screw (C) until the clamp comes off.
3. Skip ahead to **Reassembly,** page 27, Step 3, or continue below.

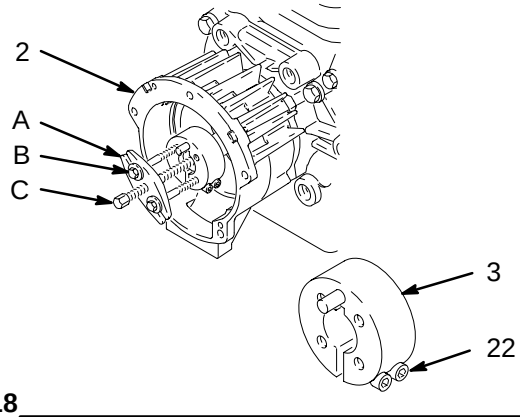

Fig. 18 05075

Clutch Housing

NOTE: Refer to Fig. 19.

1. Remove the four capscrews (8) and lockwashers (9) which hold the clutch housing (2) to the engine.
2. Remove the engine key (23).
3. Pull off the clutch housing (2).
4. Skip ahead to **Reassembly,** page 27, Step 1.

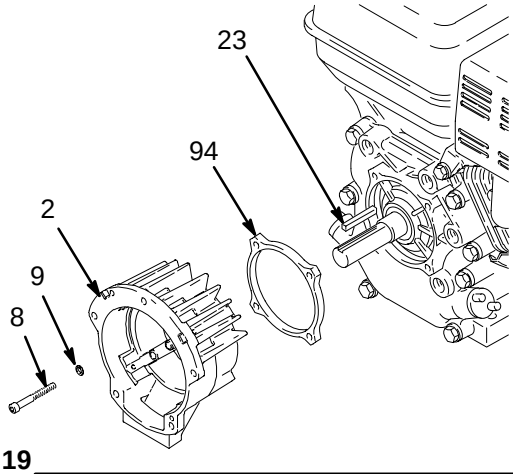

Fig. 19 05076

Reassembly

⚠ CAUTION

The sprayer will be out of balance when only the engine and clutch housing are installed. Support the rear of the cart to prevent the sprayer from falling over.

1. Install spacer (94) between the engine and the clutch housing (2).

2. Install the **clutch housing (2)**, capscrews (8) and lockwashers (9) on the engine.

3. Install the engine shaft **key (23).** See Fig. 20.

4. Press the **clamp (3)** onto the engine shaft (A). Maintain the 1.084 inch +/– 0.01 (27.53 +/– 0.25 mm) dimension shown in Fig. 21.

   To check the dimension, place a rigid, straight steel bar (B) across the face of the clutch housing (2). Use an accurate measuring device to measure the distance between the bar and the face of the clamp. Adjust the clamp as necessary. Torque the two screws (22) to 120 in–lb (14 N.m).

5. Connect the wires of the harness (63) with the screws (62) in both places on the field (wires can be attached to either connection). Pull the plastic caps (C) up and snap them over the screws. Install the field in the clutch housing. Push the wire harness through the slot in the clutch housing. Align the setscrew holes in the field and the clutch housing (2). Use a feeler gage to center the field (6) by measuring the gap between the four housing bosses where the set screws pass through the housing and the field. Adjust the set screws to provide even clearance. Then tighten the setscrews (25) oppositely and evenly, to 27 in–lb (3.2 N.m). See Fig. 20.

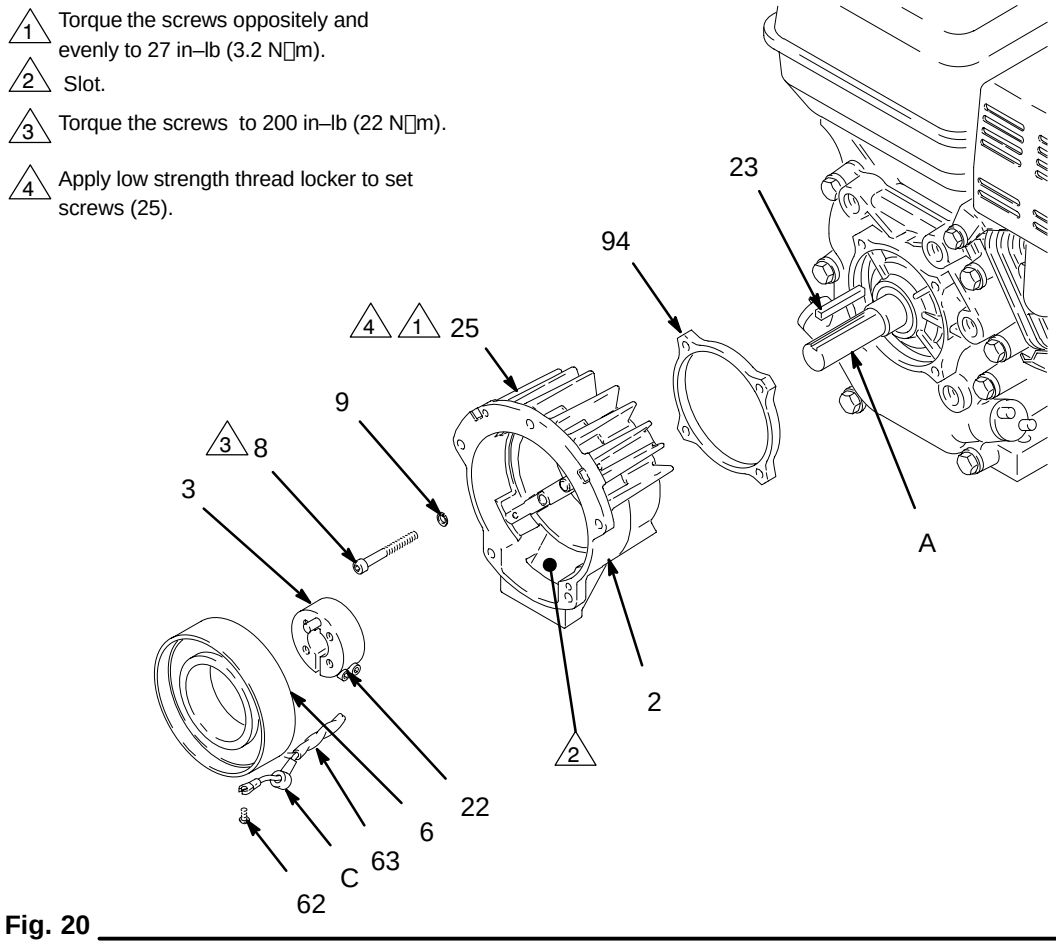

Fig. 20

Reassembly

1 The face of the housing.

2 1.084 ± .010 inch (27.53 ± .25 mm).

3 Torque the screws to 120 in–lb (14 N.m).

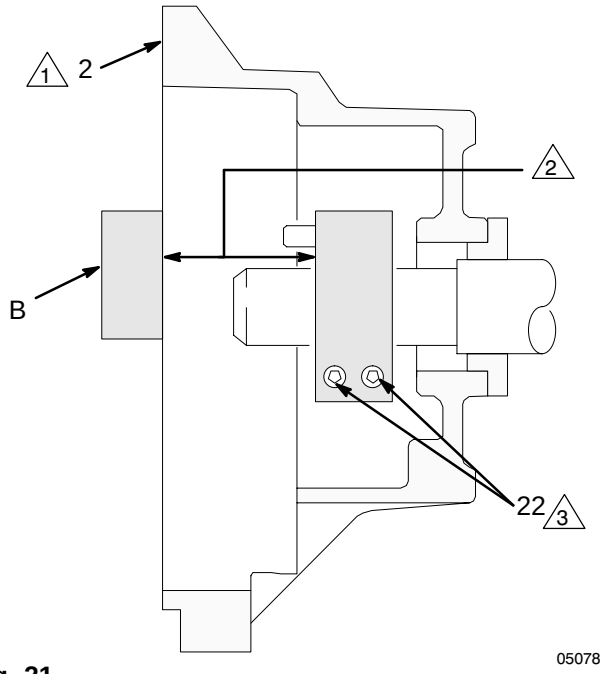

Fig. 21

⚠ CAUTION

The sprayer will be out of balance when only the engine and clutch housing are installed. Support the rear of the cart to prevent the sprayer from falling over.

6. Place the **engine (1)** assembly on the cart. Align the mounting holes. Carefully guide the engine wire (D) and wiring harness (63) from the field, through the appropriate grommets (66) in the mounting plate (E). Install the flange screws (50) and locknuts (51), but do not tighten these screws yet. Connect the engine wire (D) to the red wire (B), and connect the black and white wires as shown in the Detail drawing in Fig. 22.

Reassembly

7. Be sure the face of the **rotor (4a)** and the field (6) are free of all oil and contaminants. Remove any burrs on the outside edge of the rotor. Install the rotor, lockwashers (21) and capscrews (22). Torque the capscrews to 7 ft–lb (9.5 N.m). See Fig. 22.

8. After installing the rotor (4a), pull the engine recoil rope to assure that the engine turns freely, and there is no contact between the rotor (4a) and the field (6). If there is contact, loosen the setscrews (25) and reposition the field. Tighten the setscrews oppositely and evenly to 27 in–lb (3.2 N□m).

9. Be sure the face of the **armature (4b)** is clean. Assemble the armature to the hub in the pinion housing (11). A retaining ring located within the armature makes it difficult to assemble these parts. Follow this procedure for the best results. First, lock a few splines of both parts. While they are locked, use a screwdriver to gently push the retaining ring into the armature, and finish engaging the splines. Push the armature onto the hub until it contacts the ring (11j**). See Fig. 13 on page 22.

10. Assemble the drive assembly (D) to the clutch housing, using the capscrews (10) and lockwashers (9). See Fig. 22.

11. Install the flange screws (26), then tighten lock nuts (51) and screws (26).

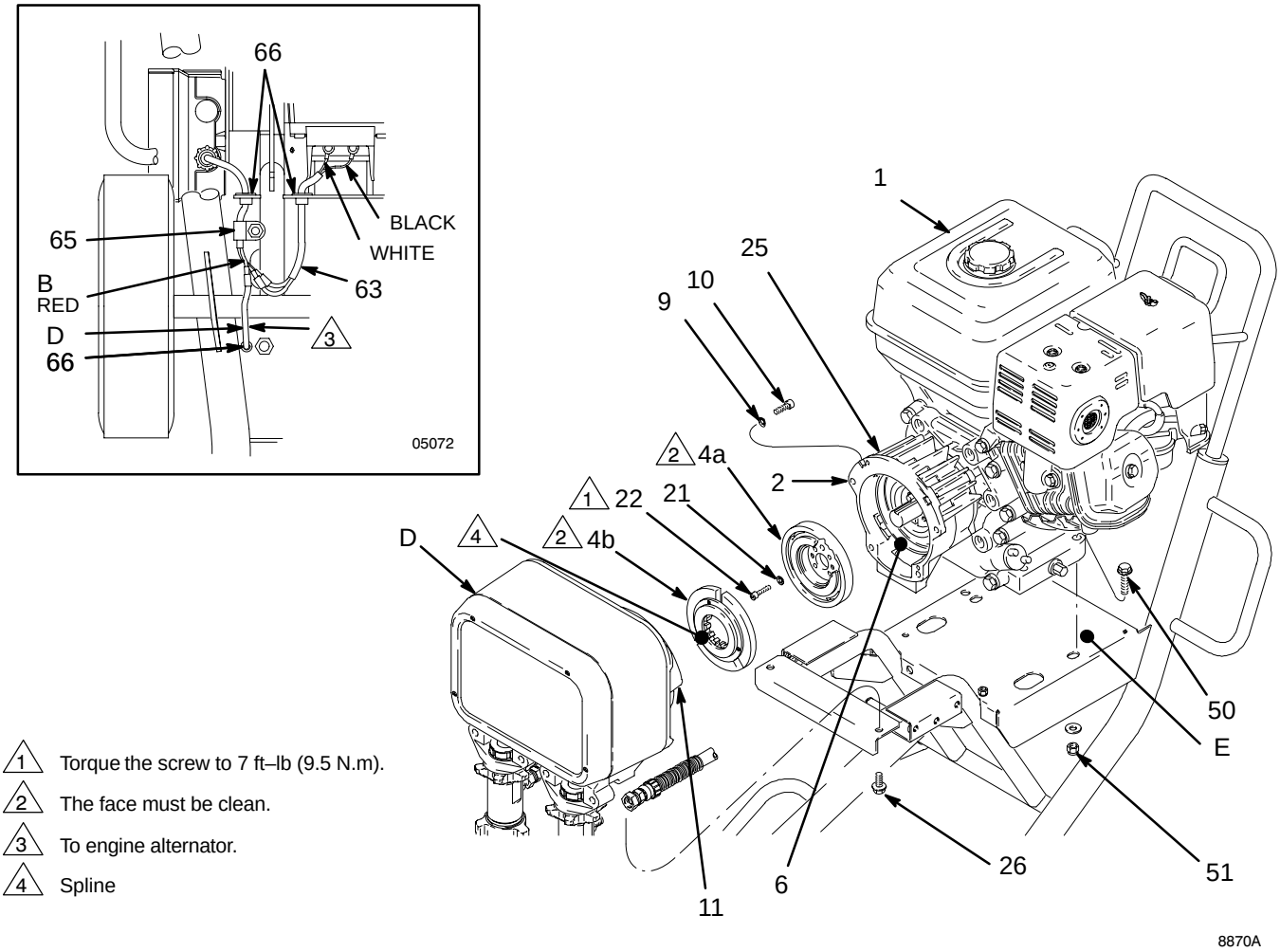

1 Torque the screw to 7 ft–lb (9.5 N.m).

2 The face must be clean.

3 To engine alternator.

4 Spline

Fig. 22

Pressure Control Replacement

⚠ WARNING

INJECTION HAZARD
To reduce the risk of serious injury, whenever you are instructed to relieve pressure, follow the **Pressure Relief Procedure** on page 12.

1. Follow the **Pressure Relief Procedure**, page 12.

2. Use two wrenches and disconnect the hose at the pressure control. Hold the fitting (A) firmly. See the **CAUTION**, below. See Fig. 23.

3. Disconnect drain hose (104) at the pressure drain valve (53). Remove screw (100) and use two wrenches to disconnect the fitting between the filter and the pressure control. Hold the fitting (A) firmly. Remove the filter with the bracket (96). Loosen the two screws (30) holding the filter to the bracket (96), but do not remove them.

⚠ CAUTION

Do not allow the fitting (A) to turn when removing or connecting the hose or filter. Turning the fittings can shift the calibration of the pressure control.

4. Remove the four mounting screws and washers (302, 303, 304) from the pressure control cover (76). See Fig. 24.

5. Carefully remove the engine control board (301) so as not to stress the cables.

6. Disconnect the black and white wires of the pressure control cable (314) from the engine control board.

7. Disconnect the potentiometer cable assembly (310) from the pressure control cover.

8. Disconnect the red power lead (B) from the ON/OFF switch.

9. Loosen the ground terminal screw (317) and disconnect the ground lead (C).

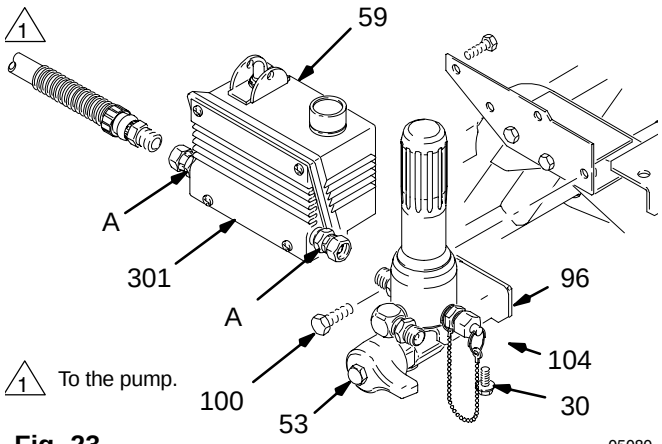

Fig. 23 05080

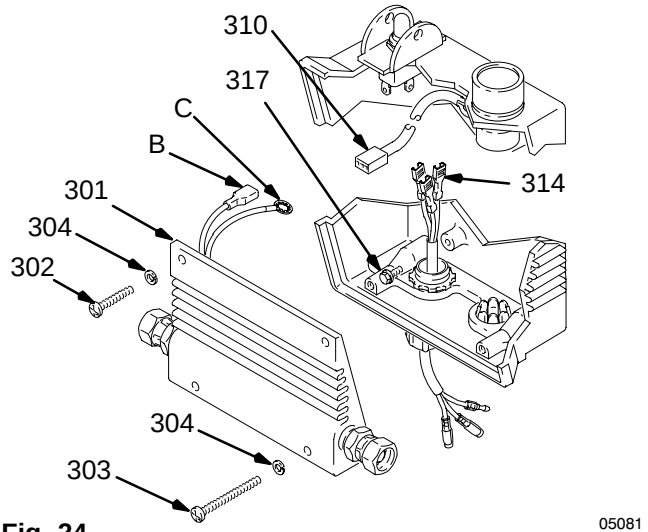

Fig. 24 05081

⚠ WARNING

Do not attempt to adjust or calibrate the pressure control. If the pressure control is faulty, replace it.

10. Pull off the engine control board.

11. Reassemble in the reverse order; attach ground wire (C), power lead (B), and the black and white connectors. Attach the engine control board (301) using the four mounting screws and washers (302, 303, 304).

12. Use two wrenches and tighten the filter and hose fittings (A). See preceding caution.

13. Slide bracket (96) to contact cart squarely. Tighten both filter mounting screws (30). Install and tighten screw (100).

14. If replacing the complete pressure control, follow steps 1 through 3 on page 30 and remove three mounting screws (64) and lock washers (92). Remove pressure control (59). See Fig. 25.

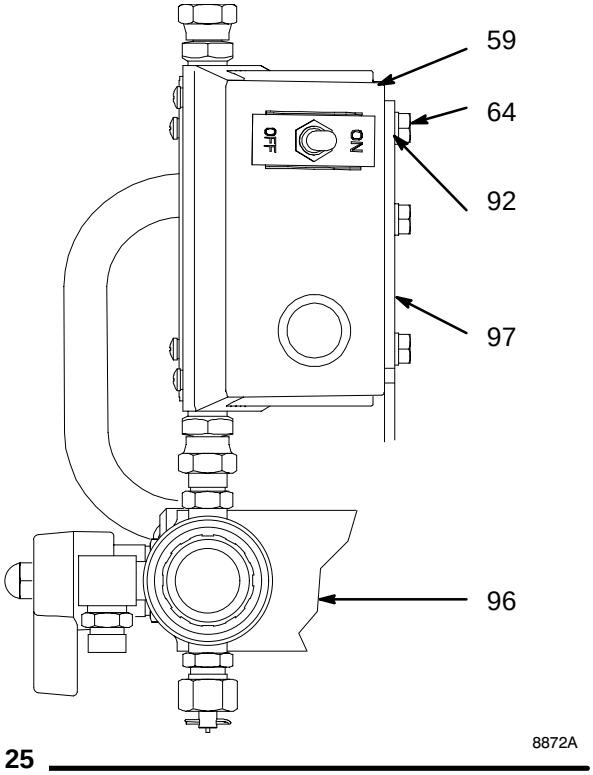

Fig. 25

15. Reassemble screws (64) and lock washers (92), then follow steps 12 and 13 on page 30.

Displacement Pump

⚠ WARNING

INJECTION HAZARD
To reduce the risk of serious injury, whenever you are instructed to relieve pressure, follow the **Pressure Relief Procedure** on page 12.

Removing the pump. (See Fig. 26.)

1. Follow the **Pressure Relief Procedure**, page 12.
2. Flush the pump. See page 13.
3. Unscrew the inlet manifold (98) from the pumps, holding a wrench on the pump intake valve (B) to keep the pump from loosening.
4. Disconnect the hose (33) from the pump outlet nipple (29).
5. Use a screwdriver to push up the retaining spring (17) at the top of the pump. Push the pin (16) out the rear.
6. Loosen the jam nut (18) with an adjustable wrench. Unscrew and remove the displacement pump.

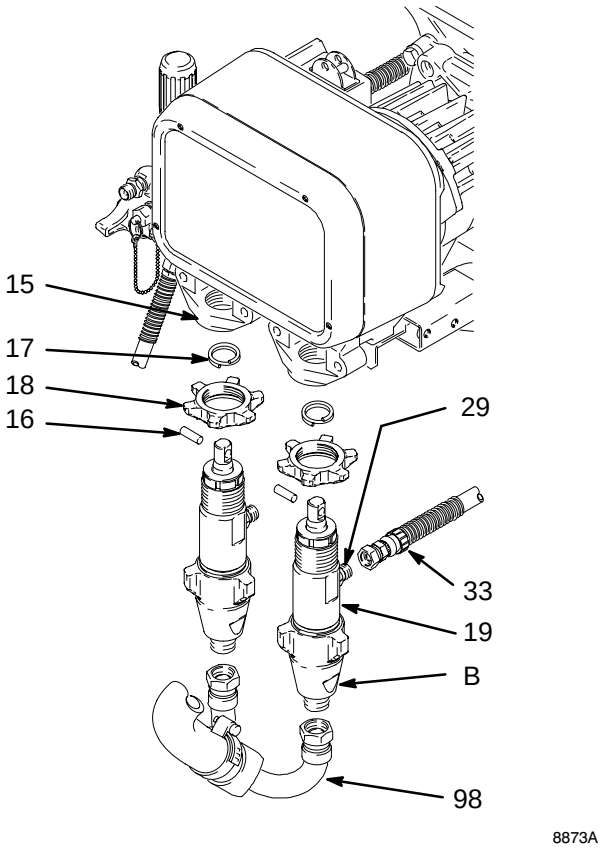

Fig. 26

Repairing the pump

See manual 308798 for pump repair instructions.

Displacement Pump

Installing the pump. (See Fig. 27.)

1. Install the lock nut (18) all the way on the pump. Screw one pump about 3/4 of the way into the bearing housing (15). Hold pin (16) up to pin hole in connecting rod (14) and continue to screw in the pump until pin slides easily into hole. Continue screwing in pump until it stops on the lock nut (18). Repeat the procedure for the second pump.

2. Back off each pump until the top of the pump cylinder is flush with bearing housing face as indicated. Orient outlet manifolds so the tops are aligned by rotating cylinders no more than one turn up or down.

⚠ WARNING

MOVING PARTS HAZARD
Be sure the retaining spring (17) is firmly in the groove, all the way around, to prevent the pin (16) from working loose due to vibration.

If the pin works loose, it or other parts could break off due the force of the pump action. These parts could be projected through the air and result in serious injury or property damage, including damage to the pump and bearing housing.

3. Push the retaining spring (17) into the groove all the way around the connecting rod.

4. Tighten lock nut (18) to 79 ft-lb (107 N.m) with a wrench and hammer.

5. Install inlet manifold (98) and siphon assembly.

1 Pump cylinder flush with this face

2 Torque the nut to 79 ft–lb (107 N□m).

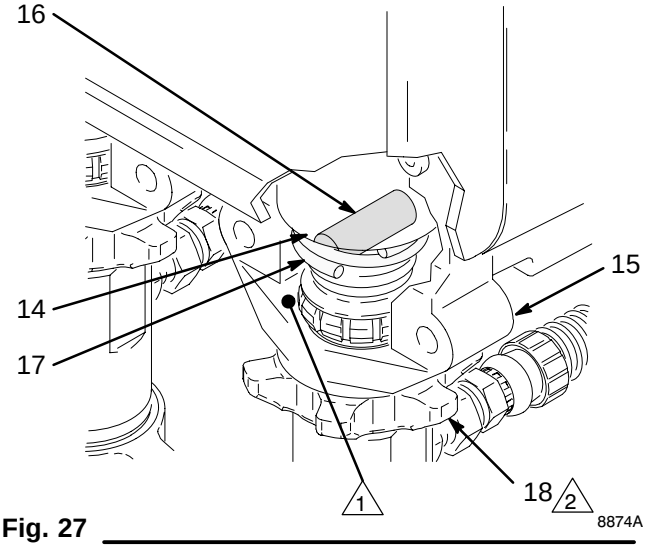

Fig. 27

Sprayer Parts Drawing

Model 232640

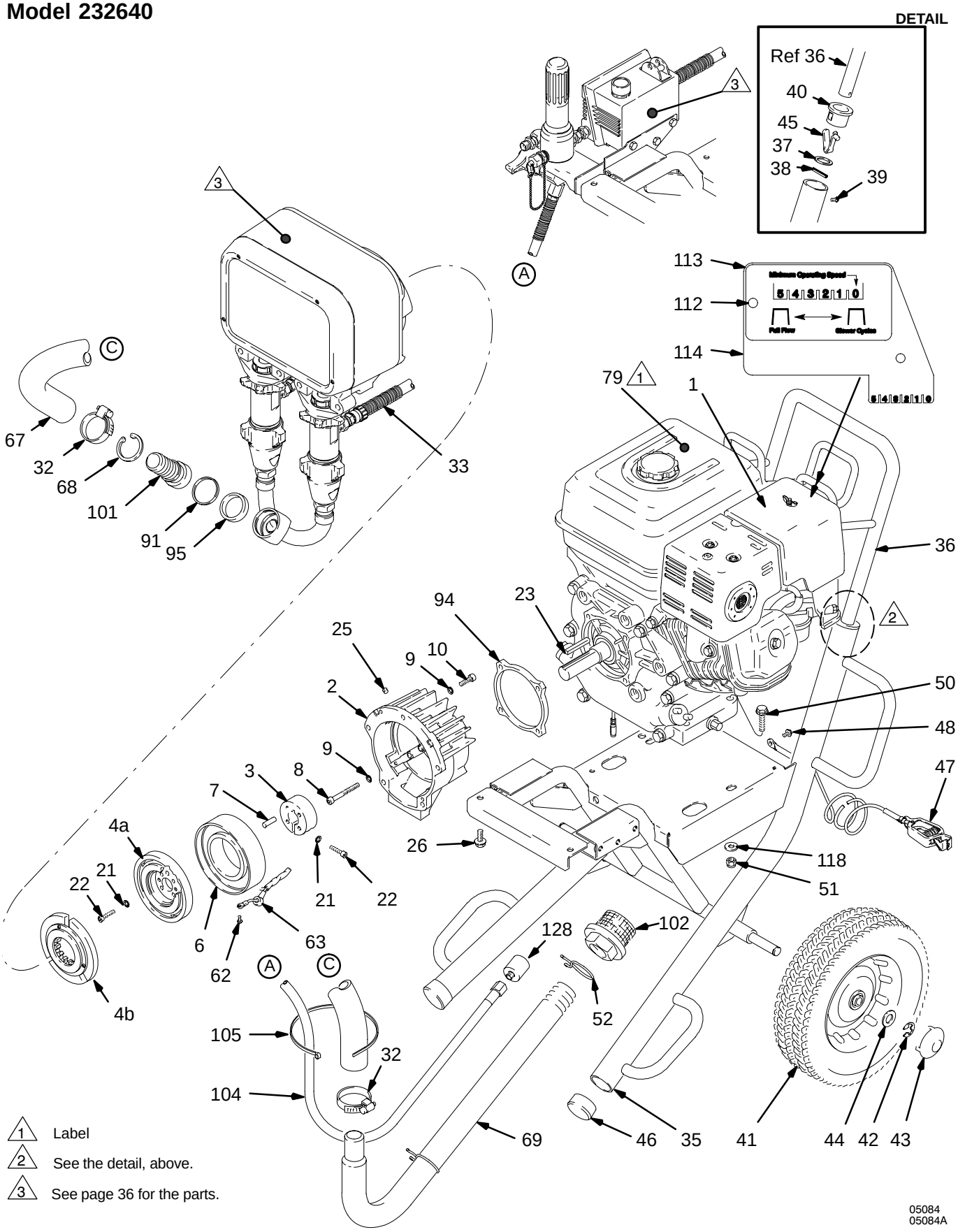

1 Label

2 See the detail, above.

3 See page 36 for the parts.

05084
05084A

Sprayer Parts List

Ref No.	Part No.	Description	Qty
1	112773	ENGINE, gasoline, 8 hp	1
2	237856	CLUTCH HOUSING	1
3	190092	CLAMP, rotor	1
4	237839	CLUTCH ASSEMBLY includes 4a and 4b	1
4a		ROTOR, 5” clutch	1
4b		ARMATURE, 5” clutch	1
6	183400	FIELD, 5” clutch	1
7	108800	PIN, dowel, spring, $^5/_{16}$ x 1 inch	1
8	112815	CAPSCREW, socket head, $^5/_{16}$–24 x 2–1/2 inch	4
9	104008	WASHER, lock, spring	17
10	101864	CAPSCREW, socket head, $^5/_{16}$ x 18 x 1 inch	10
21	105510	WASHER, lock, spring	6
22	108803	CAPSCREW, socket head, 1/4–28 x 1 inch	6
23	190093	KEY, parallel, 1/4 inch sq x 1.72 inch	1
25	113407	SETSCREW	4
26	111192	FLANGE SCREW, hex head, 3/8–16 x 7/8 inch	2
32	112799	CLAMP, hose	2
35	237473	CART FRAME	1
36	238187	CART HANDLE & HOSE RACK	1
37	183350	WASHER, plain	2
38	108068	PIN, spring, straight, $^3/_{16}$ x 1–1/4 inch	2
39	108795	SCREW, mach, pan head, 10–32 x $^5/_{16}$ inch	4
40	187604	SLEEVE	2
41	112786	WHEEL, semi-pneumatic	2
42	101242	RING, retaining	2
43	104811	HUBCAP	2
44	154636	WASHER, $^5/_8$ inch	2
45	112827	BUTTON, snap	2
46	112125	PLUG, tubing	2
47	237686	GROUNDING CLAMP & WIRE	1
48	112798	SCREW, hex washer head, 8–32 x $^3/_8$ inch	1
50	112785	FLANGE SCREW, hex head, 3/8–16 x 1–1/2 inch	2
51	101566	LOCKNUT, heavy hex, 3/8–16	2
52	194445	CLIP, spring	2
62	108860	SCREW, mach, bdgh, 8–32 x 1/4 inch	2
63	220980	HARNESS, wiring	1
67	190775	HOSE, suction	1
68	112826	RING, retaining	1
69	190776	TUBE, suction	1
79▲	194126	LABEL, warning	1
91	111178	PACKING, o-ring	1
94	190443	SPACER, thermal	1
95	113082	PACKING, o-ring	1
101	237843	CONNECTOR, barb, hose includes 91 and 95	1
102	237840	STRAINER	1
104	194179	TUBE, drain	1
105	114958	TIE, cable	3
112	113084	RIVET	2
113	290137	LABEL, throttle	1
114	190684	HOLDER, throttle label	1
118	100023	WASHER, flat	2
128	241718	DEFLECTOR	1

▲ *Replacement Danger and Warning labels, tags, and cards are available free.*

Sprayer Parts Drawing

Model 232640

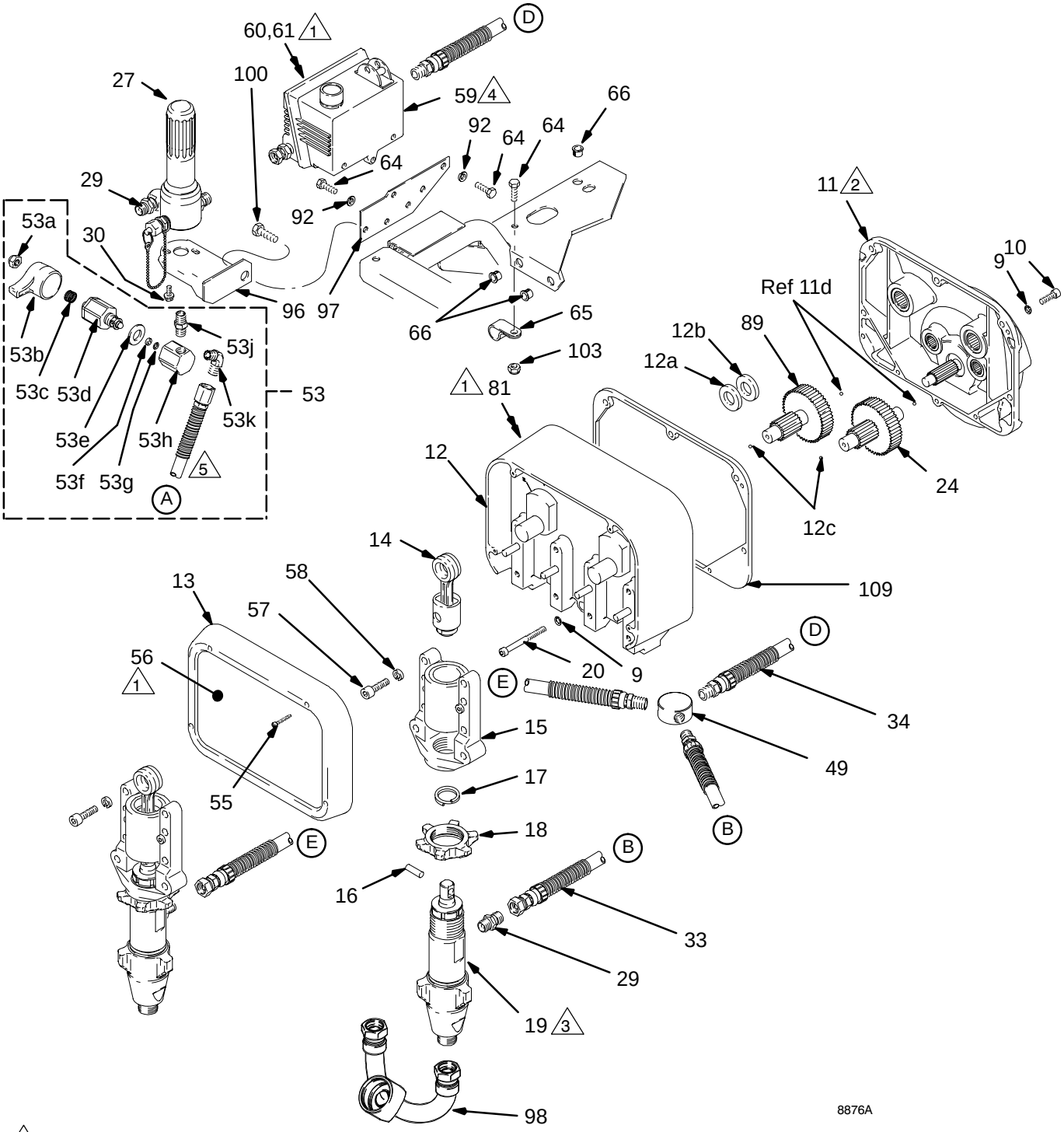

1 Label

2 See page 38 for the parts.

3 See manual 308798 for the parts.

4 See page 39 for the parts.

5 Hose is not part of 53..

05085

Sprayer Parts List

Model 232640*

Ref No.	Part No.	Description	Qty
9	104008	WASHER, lock, spring	17
10	101864	CAPSCREW, socket head, $^{5}/_{16}$ x 18 x 1 inch	10
11	237846	PINION HOUSING ASSEMBLY See parts on page 38	1
12	237845	DRIVE HOUSING Includes items 12a to 12f	1
12a	106227	WASHER, bronze	2
12b	183209	WASHER, silver	2
12c	100069	BALL, sst	2
12d	113089	JAR, grease	1
12e	113085	TUBE, grease	1
12f	190662	GASKET, housing	1
13	189950	COVER, Front	1
14	220640	ROD, connecting	2
15	220639	HOUSING, bearing	2
16	183210	PIN, straight, $^{3}/_{8}$ x 1–$^{1}/_{8}$ inch	2
17	183169	SPRING, retaining	2
18	193031	NUT, retaining	2
19	240291	DISPLACEMENT PUMP *See manual 308798 for parts*	2
20	111822	CAPSCREW, socket head, $^{5}/_{16}$ x 18 x 3”	3
24	237844	GEAR REDUCER	1
27	241107	FILTER, fluid *See manual 307273 for parts*	1
29	162485	NIPPLE, pipe, $^{3}/_{8}$ npt(m) x $^{3}/_{8}$ npsm(m)	4
30	110997	FLANGE SCREW, hex head, 1/4–20 x 5/8 inch	2
33	240795	HOSE, 3/8 inch ID, cpld 3/8–18 npt 12 inch (304 mm), full length spring guard	2
34	241292	HOSE, cpld, 3/8–18 npt 35 inch (889 mm), spring guard both ends	1
49	194205	FITTING, wye, 3/8 in.	1
53	241544	PRESSURE DRAIN VALVE KIT includes 53a through 53k	1
53a	114688	NUT, cap, hex hd	1
53b	194102	HANDLE, valve	1
53c	114708	SPRING, compression	1
53d	245103**	VALVE	1
53e	114797	GASKET	1
53f	193709	SEAT, valve	1
53g	193710	SEAL, valve	1
53h	194171	HOUSING, valve	1
53j	156971	NIPPLE, short	1
53k	110249	ADAPTER, male elbow, 90°	1
55	108850	SCREW, filh, 10–24 x 2 inch	4
56	194200	LABEL, identification	1
57	110141	CAPSCREW, hex head, $^{3}/_{8}$–16 x 1–1/2 inch	8
58	106115	LOCKWASHER, spring, 3/8 inch	8
59	237838	CONTROL, pressure See parts on page 39	1
60	290375	LABEL, identification, control, top	1
61	194201	LABEL, identification, control, bottom	1
64	101344	FLANGE SCREW, hex, $^{5}/_{16}$–18	6
65	108868	CLAMP, wire	1
66	114678	BUSHING, snap	3
81▲	194125	LABEL, Danger, English	1
89	237849	GEAR REDUCER	1
92	100214	LOCKWASHER, 5/16	5
96	237831	BRACKET, filter mounting	1
97	190474	BRACKET, control	1
98	237827	MANIFOLD, inlet	1
100	112818	SCREW, cap, hex head, lg flange	1
103	110838	LOCKNUT, 5/16–18	1
104	194179	TUBE, drain	1
109	190662	GASKET, housing	1

* Gauge Kit 241339 included in Sprayer 233009

** Drain valve replacement kit 245103 includes 53a through 53g.

▲ *Replacement Danger and Warning labels, tags, and cards are available free.*

Pinion Assembly Parts List and Drawing

Assembly 237846

Ref No.	Part No.	Description	Qty
11a	189948	.PINION HOUSING	1
11b	112602	.PIN	2
11c	108692	.BEARING	2
11d	100069	.BALL	2
11e	107088	.BEARING	1
11f**	190077	.PINION SHAFT	1
11g**	108798	.BALL BEARING, large	1
11h**	190665	.HUB, armature	1
11j**	108796	.RETAINING RING, small	1
11k	112770	.RETAINING RING, large	1
11l	190662	.GASKET, housing	1

***Included in Repair Kit No. 237847.*

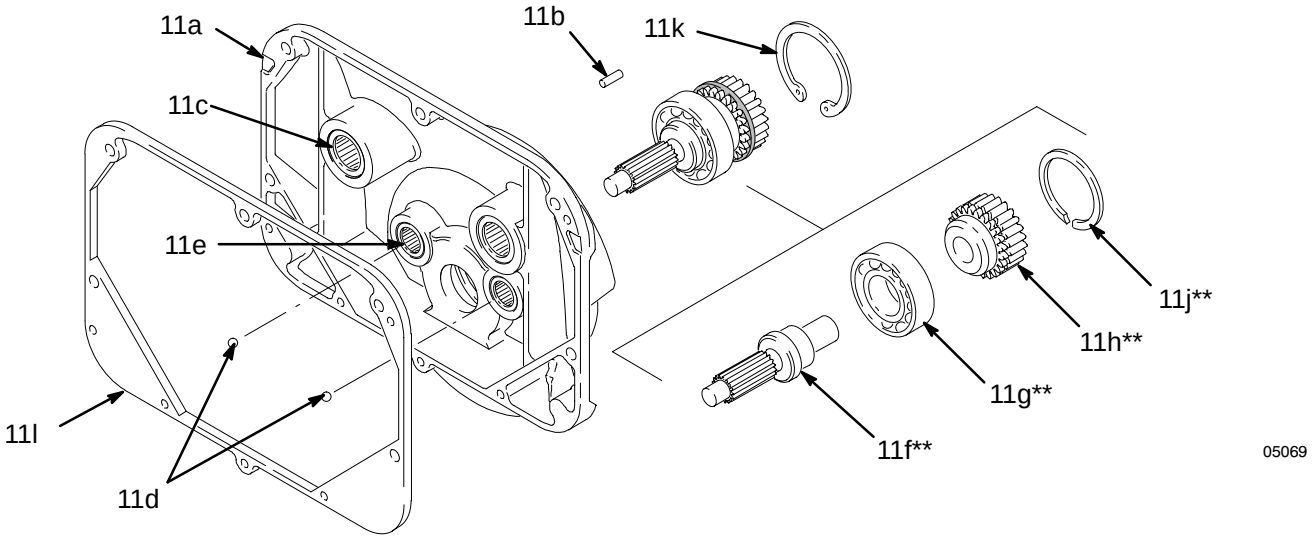

Accessories

Displacement Pump Repair Kit **220877**
Parts included in the kit are shown in manual 308798.

Sleeve Removal Tool **224788**
Required for removing the displacement pump sleeve.

Hose, 3/8” x 50’ **237854**
3/8–18 npt male x 3/8–18 npsm female swivel.

Hose, 3/8” x 50’ **238041**
3/8–18 npsm female swivel, both ends.

Suction Tube Kit **238046**
For use with 55 gallon (200 liter) barrels.

Dual Filter Kit **238045**
Required for multiple gun spraying operations.

Immersion Tube Kit **238044**
To be used with a 5–gallon bucket.

Contractor Spray Gun **220955**

Gun Manifold **238042**
Connects three guns to fluid filter.

Contractor Spray Gun/3/8” Hose Kit **238000**

RAC™ IV Dripless™ Tip Guard **220422**
Safety feature that reduces the risk of injection injury.

RAC™ IV Heavy Duty Tip Guard **222674**
Safety feature that reduces the risk of injection injury.

DANGER LABELS

The English language DANGER label shown on page 4 is also on your sprayer. If you have painters who do not read English, order one of the following labels to apply to your sprayer. The drawing below shows the best placement of these labels for good visibility.

Order the labels directly from Graco, free of charge. Toll Free: 1–800–328–0211

French	**185956**
Spanish	**185961**
German	**186041**
Greek	**186045**
Korean	**186049**
English	**194125**

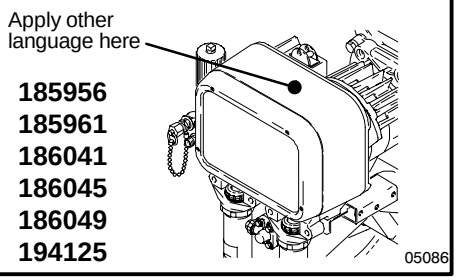

Pressure Control Parts List

237838 Pressure Control for the GM10000 Sprayers

Ref No.	Part No.	Description	Qty
301	237673	ENGINE CONTROL BOARD	1
302	107251	SCREW, panhead, 10–24 x 1 inch	2
303	112610	SCREW, panhead, 10–24 x 2 inch	2
304	100020	LOCKWASHER, No. 10	4
305	189095	HOUSING,	1
306	112614	PLUG	1
307	105679	TOGGLE SWITCH	1
308	107255	GUARD	1
309	105659	BOOT	1
310	236352	POTENTIOMETER, pressure adjustment	1
311	112382	NUT, shaft, sealing	1
312	112373	KNOB	1
313	185565	LABEL	1
314	237674	CONDUCTOR	1
315	109078	CONNECTOR	1
316	112376	LOCKNUT	1
317	100078	SCREW, hex head, 8–24 x .375 inch	1
318▲	189286	LABEL, warning	1
319▲	189246	LABEL, warning	1

▲ *Replacement Danger and Warning labels, tags, and cards are available free.*

Parts Drawing – Pressure Control

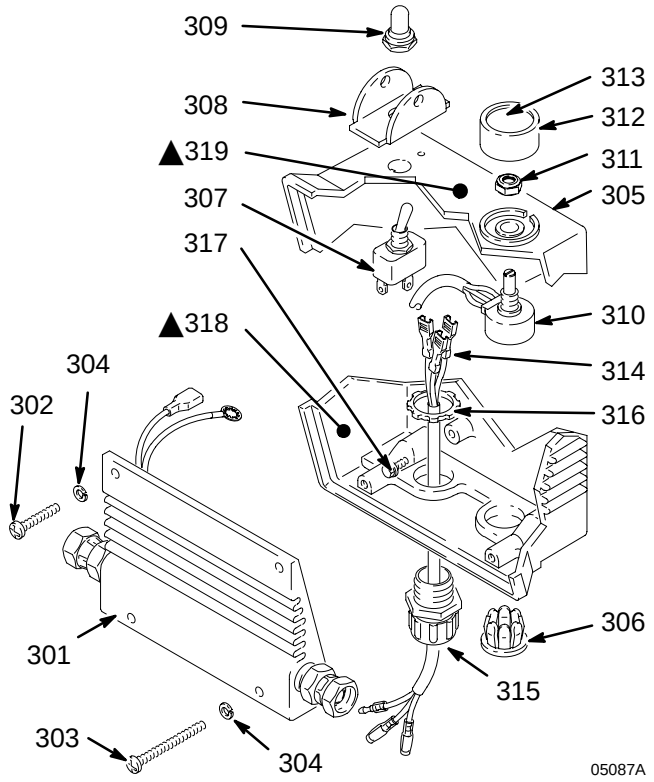

Wiring Schematic – Pressure Control

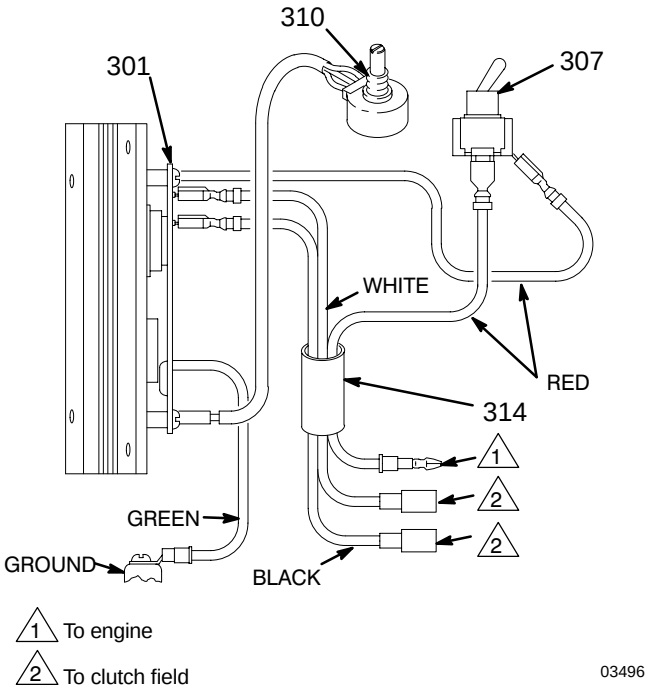

Dimensions

Weight (dry, without packaging) . . . . . 220 lb (100 kg)
Height . . . . . 32 inch (813 mm)
Length (with suction hose installed) . . . . . 36 inch (915 mm)
Width . . . . . 23 inch (585 mm)

Graco Phone Number

TO PLACE AN ORDER, contact your Graco distributor, or call this number to identify the distributor closest to you: **1–800–690–2894 Toll Free**

Technical Data

Engine	8 horsepower, Honda
Maximum working pressure	3000 psi (207 bar, 21 MPa)
Noise Level	
Sound power	110 dB(A) Per ISO 3744
Sound pressure	100 dB(A) measured at 3.1 feet (1 m)
Cycles/gallon (liter)	52 (13)
Maximum delivery	2.5 gpm (9 liter/min)
Fuel tank capacity	1.59 gallons (6.04 liter)
Maximum tip size	1 gun with 0. 055 inch tip up to 6 guns with 0.021 inch tip
Inlet paint strainer	8 mesh stainless steel screen, reusable
Outlet paint filter	60 mesh (250 micron) stainless steel screen, reusable
Pump inlet size	3/4 inch npt (m)
Fluid outlet size	3/8 npsm from fluid filter
Wetted parts	
Displacement Pump	stainless steel, carbon steel, polyurethane, uhmw polyethylene, Delrin®, leather
Filter	aluminum, carbon steel, stainless steel
Pressure Control	Aluminum
Suction Hose	Nitrile (synthetic rubber)

NOTE: Delrin® is a trademark of the DuPont Company.

Graco Warranty

Graco warrants all equipment listed in this manual which is manufactured by Graco and bearing its name to be free from defects in material and workmanship on the date of sale by an authorized Graco distributor to the original purchaser for use. With the exception of any special extended or limited warranty published by Graco, Graco will, for a period of twelve months from the date of sale, repair or replace any part of the equipment determined by Graco to be defective. This warranty applies only when the equipment is installed, operated and maintained in accordance with Graco's written recommendations.

This warranty does not cover, and Graco shall not be liable for general wear and tear, or any malfunction, damage or wear caused by faulty installation, misapplication, abrasion, corrosion, inadequate or improper maintenance, negligence, accident, tampering, or substitution of non-Graco component parts. Nor shall Graco be liable for malfunction, damage or wear caused by the incompatibility of Graco equipment with structures, accessories, equipment or materials not supplied by Graco, or the improper design, manufacture, installation, operation or maintenance or structures, accessories, equipment or materials not supplied by Graco.

This warranty is conditioned upon the prepaid return of the equipment claimed to be defective to an authorized Graco distributor for verification of the claimed defect. If the claimed defect is verified, Graco will repair or replace free of charge any defective parts. The equipment will be returned to the original purchaser transportation prepaid. If inspection of the equipment does not disclose any defect in material or workmanship, repairs will be made at a reasonable charge, which charges may include the costs of parts, labor, and transportation.

Graco's sole obligation and buyer's sole remedy for any breach of warranty shall be as set forth above. The buyer agrees that no other remedy (including, but not limited to, incidental or consequential damages for lost profits, lost sales, injury to person or property, or any other incidental or consequential loss) shall be available. Any action for breach of warranty must be brought within two (2) years of the date of sale.

GRACO MAKES NO WARRANTY, AND DISCLAIMS ALL IMPLIED WARRANTIES OF MERCHANTABILITY AND FITNESS FOR A PARTICULAR PURPOSE IN CONNECTION WITH ACCESSORIES, EQUIPMENT, MATERIALS OR COMPONENTS SOLD BUT NOT MANUFACTURED BY GRACO. These items sold, but not manufactured by Graco (such as electric motors, gas engines, switches, hose, etc.), are subject to the warranty, if any, of their manufacturer. Graco will provide purchaser with reasonable assistance in making any claim for breach of these warranties.

In no event will Graco be liable for indirect, incidental, special or consequential damages resulting from Graco supplying equipment hereunder, or the furnishing, performance, or use of any products or other goods sold hereto, whether due to a breach of contract, breach of warranty, the negligence of Graco, or otherwise.

FOR GRACO CANADA CUSTOMERS

The parties acknowledge that they have required that the present document, as well as all documents, notices and legal proceedings entered into, given or instituted pursuant hereto or relating directly or indirectly hereto, be drawn up in English. Les parties reconnaissent avoir convenu que la rédaction du présente document sera en Anglais, ainsi que tous documents, avis et procédures judiciaires exécutés, donnés ou intentés à la suite de ou en rapport, directement ou indirectement, avec les procédures concernées.

ADDITIONAL WARRANTY COVERAGE

Graco does provide extended warranty and wear warranty for products described in the "Graco Contractor Equipment Warranty Program".

All written and visual data contained in this document reflects the latest product information available at the time of publication. Graco reserves the right to make changes at any time without notice.

Sales Offices: Minneapolis, Detroit
International Offices: Belgium, Korea, Hong Kong, Japan

GRACO INC. P.O. BOX 1441 MINNEAPOLIS, MN 55440–1441

http://www.graco.com

PRINTED IN USA 308871 February 1999, Revised 4/2001